Appendix G

Water Quality Report

CITY OF SOLANA BEACH

PRIORITY DEVELOPMENT PROJECT (PDP)
PRELIMINARY WATER QUALITY TECHNICAL REPORT (WQTR)
FOR
SOLANA BEACH 101
Case No. 17-14-08

HIGHWAY 101 & DAHLIA DRIVE
SOLANA BEACH, CA 92075

ASSESSORS PARCEL NUMBER
APN #S 298-052-06, 07, 08, 13 and 14

ENGINEER OF WORK:

Debby Reece, PE
RCE 56148, REGISTRATION EXPIRES 12/31/18

PREPARED FOR:

Zephyr Partners
700 2nd Street
Encinitas, CA 92024
858-558-3650

PDP WQTR & PLANS PREPARED BY:

PROJECT DESIGN CONSULTANTS
Planning | Landscape Architecture | Engineering | Survey

701 B Street, Suite 800
San Diego, CA 92101
619.235.6471 Tel
619.234.0349 Fax

DATE OF WQTR:
June 16, 2017

Job No. 4242.00

TABLE OF CONTENTS

Acronym Sheet
PDP WQTR Preparer's Certification Page
PDP WQTR Project Owner's Certification Page
Submittal Record
Project Vicinity Map
FORM 1 Site Information Checklist for PDPs
FORM 2 Source Control BMP Checklist for All Development Projects
FORM 3 Site Design/LID BMP Checklist for All Development Projects
FORM 4 Summary of PDP Structural BMPs
FORM 5Harvest and Use Feasibility Checklist
FORM 6 Categorization of Infiltration Feasibility Condition
FORM 7 Factor of Safety and Design Infiltration Rate Worksheet
FORM 8 Downstream Systems Requirements for Preservation of Coarse Sediment Supply

Attachment 1: Backup for PDP Pollutant Control BMPs
- Attachment 1a: DMA Exhibit
- Attachment 1b: Tabular Summary of DMAs and Design Capture Volume Calculations (Worksheet 1.b)
- Attachment 1c: Harvest and Use Feasibility Screening (when applicable)
- Attachment 1d: Categorization of Infiltration Feasibility Condition (when applicable)
- Attachment 1e: Pollutant Control BMP Design Worksheets / Calculations

Attachment 2: Backup for PDP Hydromodification Control Measures
- Attachment 2a: Hydromodification Management Exhibit
- Attachment 2b: Management of Critical Coarse Sediment Yield Areas
- Attachment 2c: Geomorphic Assessment of Receiving Channels
- Attachment 2d: Flow Control Facility Design

Attachment 3: Structural BMP Maintenance Plan
- Attachment 3a: Structural BMP Maintenance Thresholds and Actions
- Attachment 3b: Draft Maintenance Agreement (when applicable)

Attachment 4: Copy of Plan Sheets Showing Permanent Storm Water BMPs

ACRONYMS

APN	Assessor's Parcel Number
BMP	Best Management Practice
HMP	Hydromodification Management Plan
HSG	Hydrologic Soil Group
MS4	Municipal Separate Storm Sewer System
N/A	Not Applicable
NRCS	Natural Resources Conservation Service
PDP	Priority Development Project
PE	Professional Engineer
SC	Source Control
SD	Site Design
SDRWQCB	San Diego Regional Water Quality Control Board
SIC	Standard Industrial Classification
WQTR	Water Quality Technical Report

CERTIFICATION PAGE

Project Name: Solana Beach 101
Case No: 17-14-08

PDP WQTR PREPARER'S CERTIFICATION

I hereby declare that I am the Engineer in Responsible Charge of design of storm water best management practices (BMPs) for this project, and that I have exercised responsible charge over the design of the BMPs as defined in Section 6703 of the Business and Professions Code, and that the design is consistent with the PDP requirements of the City of Solana Beach BMP Design Manual, which is a design manual for compliance with the City of Solana Beach and the MS4 Permit (California Regional Water Quality Control Board San Diego Region Order No. R9-2015-0100) requirements for storm water management.

I have read and understand that the City Engineer has adopted minimum requirements for managing urban runoff, including storm water, from land development activities, as described in the BMP Design Manual. I certify that this PDP WQTR has been completed to the best of my ability and accurately reflects the project being proposed and the applicable BMPs proposed to minimize the potentially negative impacts of this project's land development activities on water quality. I understand and acknowledge that the plan check review of this WQTR by the City Engineer is confined to a review and does not relieve me, as the Engineer in Responsible Charge of design of storm water BMPs for this project, of my responsibilities for project design.

_____
Debby Reece, PE, RCE 56148, Registration Expires 12/31/18

Debby Reece_____
Print Name

Project Design Consultants_____
Company

_____
Date

Engineer's Seal:

PDP WQTR PROJECT OWNER'S CERTIFICATION PAGE

Project Name: Solana Beach 101
Case No: 17-14-08

PROJECT OWNER'S CERTIFICATION

This PDP WQTR has been prepared for Zephyr Partners by Project Design Consultants. The PDP WQTR is intended to comply with the PDP requirements of the City of Solana Beach BMP Design Manual, which is a design manual for compliance with the City of Solana Beach and the MS4 Permit (California Regional Water Quality Control Board San Diego Region Order No. R9-2015-0100) requirements for storm water management.

The undersigned, while it owns the subject property, is responsible for the implementation of the provisions of this plan. Once the undersigned transfers its interests in the property, its successor-in-interest shall bear the aforementioned responsibility to implement the best management practices (BMPs) describe within this plan, including ensuring on-going operation and maintenance of structural BMPs. A signed copy of this document shall be available on the subject property into perpetuity. .

_____
Project Owner's Signature

_____
Print Name

_____
Company

_____
Date

SUBMITTAL RECORD

Use this Table to keep a record of submittals of this PDP WQTR. Each time the PDP WQTR is re-submitted, provide the date and status of the project. In column 4 summarize the changes that have been made or indicate if response to plancheck comments is included. When applicable, insert response to plancheck comments behind this page.

Submittal Number	**Date**	**Project Status**	**Summary of Changes**
1	12/1/16	☒ Preliminary Design / Planning / CEQA ☐ Final Design	Initial Submittal
2	1/23/17	☒ Preliminary Design / Planning / CEQA ☐ Final Design	Second Submittal
3	6/16/17	☒ Preliminary Design / Planning / CEQA ☐ Final Design	Third Submittal
4		☐ Preliminary Design / Planning / CEQA ☐ Final Design	

PROJECT VICINITY MAP

Project Name: Solana Beach 101
Case No: 17-14-08

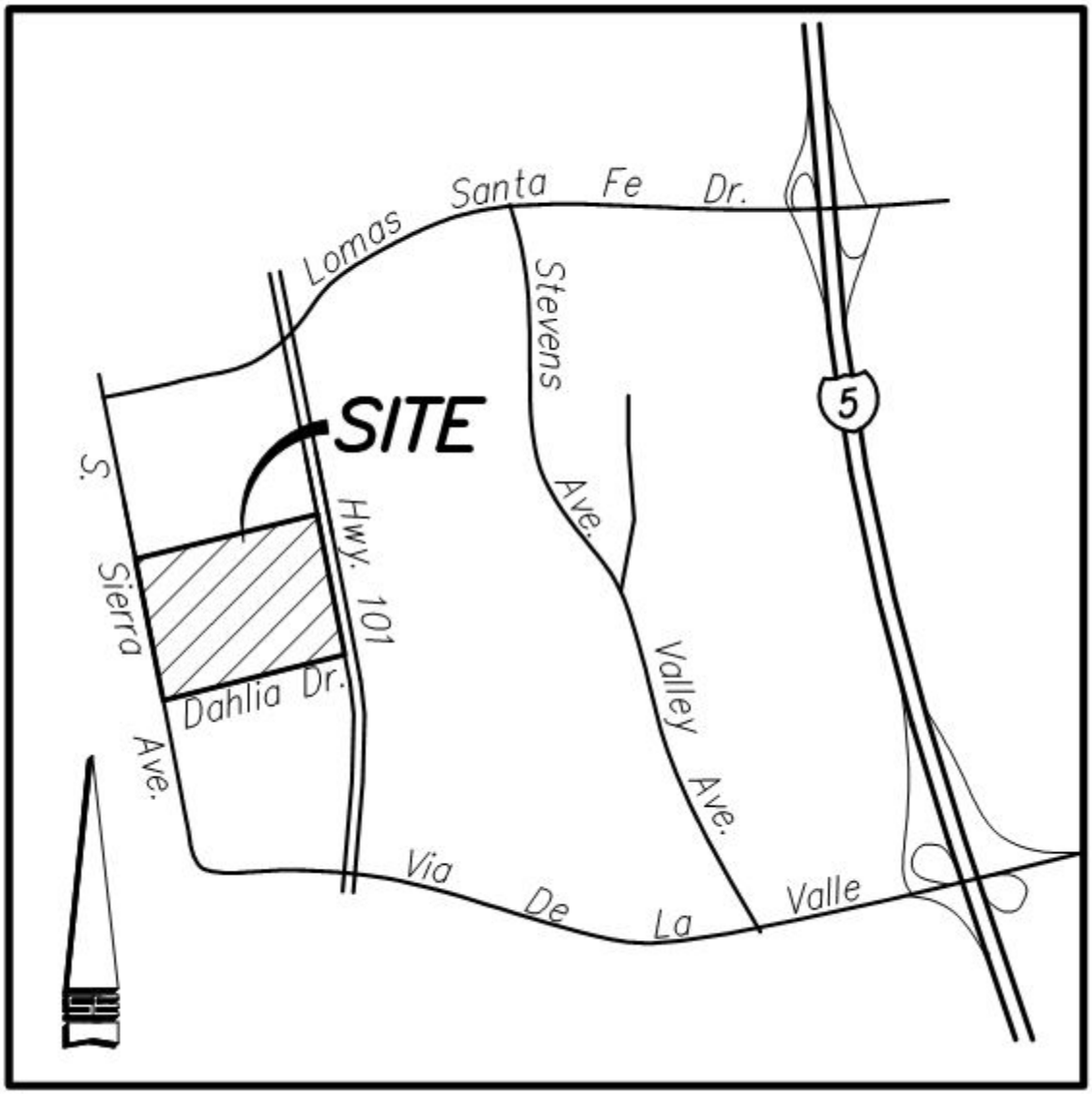

Site Information Checklist For PDPs	Form 1 (PDPs) City of Solana Beach Design Manual
Project Summary Information:	
Project Name	**Solana Beach 101**
Project Address	343 S. Highway, Solana Beach, CA 92075
Assessor's Parcel Number(s) (APN(s))	298-052-06, 07, 08, 13 and 14
Permit Application Number	Case No: 17-14-08
Project Hydrologic Unit (Complete Hydrologic Unit, Area, and Subarea Name with Numeric Identifier)	Select One: ☒San Dieguito (HA Solana Beach, HSA Rancho Santa Fe) 905.11 ☐Los Penasquitos (HA Escondido Creek, HSA San Elijo) 904.61
Project Watershed (Complete Hydrologic Unit, Area, and Subarea Name with Numeric Identifier)	San Dieguito Hydrologic Area - Solana Beach 905.1 Hydrologic Subarea – Rancho Santa Fe 905.11
Parcel Area (total area of Assessor's Parcel(s) associated with the project)	__1.95__ Acres
Area to be Disturbed by the Project (Project Area)	__2.05__ Acres (Project site consists of 1.79 acres, the 2.05 includes the additional project disturbance area beyond project boundary).
Project Proposed Impervious Area (subset of Project Area)	__1.81__ Acres
Project Proposed Pervious Area (subset of Project Area)	__0.24__ Acres
Note: Proposed Impervious Area + Proposed Pervious Area = Area to be Disturbed by the Project. This may be less than the Parcel Area.	

Form 1
Description of Existing Site Condition
Current Status of the Site (select all that apply): ☒ Existing development ☐ Previously graded but not built out ☒ Demolition completed without new construction ☐ Agricultural or other non-impervious use ☐ Vacant, undeveloped/natural Description / Additional Information: The site currently consists of an abandoned RV park, two home lots, one abandoned business, and two commercial businesses.
Existing Land Cover Includes (select all that apply): ☒ Vegetative Cover ☒ Non-Vegetated Pervious Areas ☒ Impervious Areas Description / Additional Information:
Underlying Soil belongs to Hydrologic Soil Group (select all that apply): ☐ NRCS Type A ☒ NRCS Type B ☐ NRCS Type C ☐ NRCS Type D
Approximate Depth to Groundwater (GW): ☐ GW Depth < 5 feet ☐ 5 feet < GW Depth < 10 feet ☐ 10 feet < GW Depth < 20 feet ☒ GW Depth > 20 feet No groundwater was located on site. However groundwater was encountered at a depth of 25-30 feet below ground surface at a site located 0.4 miles north of the project. (per the Geotechnical Report prepared by NOVA Services, Inc. dated 05/21/12).
Existing Natural Hydrologic Features (select all that apply): ☐ Watercourses ☐ Seeps ☐ Springs ☐ Wetlands ☒ None Description / Additional Information:

Form 1
Description of Existing Site Drainage Patterns

How is storm water runoff conveyed from the site? At a minimum, this description should answer:

(1) Whether existing drainage conveyance is natural or urban;

(2) Is runoff from offsite conveyed through the site? if yes, quantify all offsite drainage areas, design flows, and locations where offsite flows enter the project site, and summarize how such flows are conveyed through the site;

(3) Provide details regarding existing project site drainage conveyance network, including any existing storm drains, concrete channels, swales, detention facilities, storm water treatment facilities, natural or constructed channels; and

(4) Identify all discharge locations from the existing project site along with a summary of conveyance system size and capacity for each of the discharge locations. Provide summary of the pre-project drainage areas and design flows to each of the existing runoff discharge locations.

Describe existing site drainage patterns:

1. The existing drainage is urban.
2. There is no offsite drainage being conveyed through the project site.
3. Under existing conditions there is an existing grate inlet located directly north of an existing curb pop-out on the southeast corner of the project site at the northwest corner of the Highway 101/Dahlia Drive intersection. This grate inlet is tied to an existing 18-inch reinforced concrete pipe (RCP) storm drain line via an 18-inch RCP lateral.
4. There are essentially three discharge locations with runoff from the site sheet flowing in three opposing directions. An eastern portion about 1/3 the size of the project site drains towards the gutter on Highway 101 and is discharged into the existing grate inlet. This drainage area is identified as Drainage System 100. The remaining two-thirds of the site (separated into two drainage boundaries) discharges towards two locations. There is the northerly drainage boundary (System 200), consisting of the majority of the abandoned RV park runoff which drains westerly towards the South Sierra Avenue gutter. The southerly drainage boundary has runoff sheet flowing towards the South Sierra Avenue and Dahlia Drive gutters which eventually commingle at the northeastern corner of the South Sierra Avenue and Dahlia Drive intersection (System 300) before draining south via a cross gutter.

   Refer to the Existing Condition Drainage Map (Exhibit A) in Attachment 5. This is a reference exhibit taken from the Drainage Report (dated December 2016) prepared by Project Design Consultants which is under a separate cover. It shows the drainage boundaries and the flow rates at each discharge location.

Form 1
Description of Proposed Site Development
Project Description / Proposed Land Use and/or Activities: Project includes the demolition of existing homes and commercial buildings. The redevelopment will consist of three two-story office buildings, two two-story restaurants mixed with commercial or retail, two one-story buildings consisting of a retail establishment or a restaurant, two two-story residential buildings, and two levels of subterranean parking.
List/describe proposed impervious features of the project (e.g., buildings, roadways, parking lots, courtyards, athletic courts, other impervious features): The proposed impervious features include the proposed residential, commercial, retail, and restaurant buildings; proposed paving and hardscape within and around the redevelopment; an outdoor dining area; and the extension of parkway including the addition of six parking stalls on South Sierra Avenue.
List/describe proposed pervious features of the project (e.g., landscape areas): In proposed conditions, there are The proposed pervious features include planted areas in and around the project development; there are areas of decomposed granite and synthetic turf within the main walkway of the development in the proposed site plan.
Does the project include grading and changes to site topography? ☒ Yes ☐ No Description / Additional Information: There will be two levels of subterranean parking. The project will be “over structure”, so the topography changes will be governed by the building design, but the drainage patterns will mimic existing drainage patterns.

Form 1
Description of Proposed Site Drainage Patterns

Does the project include changes to site drainage (e.g., installation of new storm water conveyance systems)?

☒ Yes

☐ No

If yes, provide details regarding the proposed project site drainage conveyance network, including storm drains, concrete channels, swales, detention facilities, storm water treatment facilities, natural or constructed channels, and the method for conveying offsite flows through or around the proposed project site. Identify all discharge locations from the proposed project site along with a summary of the conveyance system size and capacity for each of the discharge locations. Provide a summary of pre- and post-project drainage areas and design flows to each of the runoff discharge locations. Reference the drainage study for detailed calculations.

Describe proposed site drainage patterns:

Under proposed conditions, drainage patterns will be relatively the same as in existing conditions. Since the proposed project will be built over structure and it was determined there is limited opportunity to gravity drain towards the adjacent street gutters, onsite drainage improvements will be designed to pump storm water into proposed biofiltration planters located along the outside edge of the project boundary limits. The pumped storm water will drain out towards the adjacent street gutters via curb outlets or directly into an existing storm drain line (on Highway 101) after treatment. The pumps and the other private storm drain systems will be a part of the O&M Plan, which will require annual maintenance verification.

As in existing conditions, there are three drainage systems (Systems 100, 200, and 300) in proposed conditions. Refer to the Proposed Conditions Drainage Map (Exhibit B) located in Attachment 5.

Form 1
Identify whether any of the following features, activities, and/or pollutant source areas will be present (select all that apply): ☐ On-site storm drain inlets ☒ Interior floor drains and elevator shaft sump pumps ☒ Interior parking garages ☒ Need for future indoor & structural pest control ☒ Landscape/Outdoor Pesticide Use ☐ Pools, spas, ponds, decorative fountains, and other water features ☒ Food service ☒ Refuse areas ☐ Industrial processes ☐ Outdoor storage of equipment or materials ☐ Vehicle and Equipment Cleaning ☐ Vehicle/Equipment Repair and Maintenance ☐ Fuel Dispensing Areas ☐ Loading Docks ☒ Fire Sprinkler Test Water ☒ Miscellaneous Drain or Wash Water ☒ Plazas, sidewalks, and parking lots Description / Additional Information:
Identification and Narrative of Receiving Water and Pollutants of Concern
Describe flow path of storm water from the project site discharge location(s), through urban storm conveyance systems as applicable, to receiving creeks, rivers, and lagoons as applicable, and ultimate discharge to the Pacific Ocean (or bay, lagoon, lake or reservoir, as applicable): Storm water from the project site is intercepted from inlets located at one location onsite (above pop-out on northwest corner of Highway 101/Dahlia Drive intersection) and two other curb inlets (one about 640-feet south of the site on South Sierra Avenue and the other is east of the Lindamar Drive entrance). The Highway 101 grate inlet is connected to a storm drain system which discharges into the railroad corridor east of Highway 101 and the two curb inlets are tied to storm drain systems that eventually discharges runoff into the Pacific Ocean. For the locations of the downstream outlets to the Pacific Ocean, refer to Attachment 2.

Form 1
List any 303(d) impaired water bodies within the path of storm water from the project site to the Pacific Ocean (or bay, lagoon, lake or reservoir, as applicable), identify the pollutant(s)/stressor(s) causing impairment, and identify any TMDLs and/or Highest Priority Pollutants from the WQIP for the impaired water bodies: The closest 303(d) listed impaired water body is the San Dieguito River which is located 0.8 miles south of the project. The pollutants are listed below.

303(d) Impaired Water Body	Pollutant(s)/Stressor(s)	TMDLs / WQIP Highest Priority Pollutant
San Dieguito River	Pathogens, nutrients, salinity, and toxicity	Enterococcus, fecal coliform, nitrogren, phosphorous, total dissolved solids, and toxicity

Identification of Project Site Pollutants*

***Identification of project site pollutants is only required if flow-thru treatment BMPs are implemented onsite in lieu of retention or biofiltration BMPs (note the project must also participate in an alternative compliance program unless prior lawful approval to meet earlier PDP requirements is demonstrated)**

Identify pollutants expected from the project site based on all proposed use(s) of the site (see BMP Design Manual Appendix B.6):

Pollutant	Not Applicable to the Project Site	Expected from the Project Site	Also a Receiving Water Pollutant of Concern
Sediment		X	
Nutrients		X	X
Heavy Metals		X	
Organic Compounds		X	
Trash & Debris		X	
Oxygen Demanding Substances		X	
Oil & Grease		X	
Bacteria & Viruses		X	X
Pesticides		X	X

Form 1
Hydromodification Management Requirements
Do hydromodification management requirements apply (see Section 1.6 of the BMP Design Manual)? ☒ Yes, hydromodification management flow control structural BMPs required. ☐ No, the project will discharge runoff directly to existing underground storm drains discharging directly to water storage reservoirs, lakes, enclosed embayments, or the Pacific Ocean. ☐ No, the project will discharge runoff directly to conveyance channels whose bed and bank are concrete-lined all the way from the point of discharge to water storage reservoirs, lakes, enclosed embayments, or the Pacific Ocean. ☐ No, the project will discharge runoff directly to an area identified as appropriate for an exemption by the WMAA for the watershed in which the project resides. Description / Additional Information (to be provided if a 'No' answer has been selected above): West side of the project site has been confirmed by City staff to be exempt from hydromodification requirements. However, east side of the project site drains towards Highway 101, with portions of the concrete ditch missing (with earthern swale in between). Thus necessary flow attenuation for hydromodification compliance is required for only the east part of the project site.
Critical Coarse Sediment Yield Areas* ***This Section only required if hydromodification management requirements apply**
N/A for this project) Based on the maps provided within the WMAA, do potential critical coarse sediment yield areas exist within the project drainage boundaries? ☐ Yes ☒ No, No critical coarse sediment yield areas to be protected based on WMAA maps If yes, have any of the optional analyses presented in Section 6.2 of the BMP Design Manual been performed? ☐ 6.2.1 Verification of Geomorphic Landscape Units (GLUs) Onsite ☐ 6.2.2 Downstream Systems Sensitivity to Coarse Sediment ☐ 6.2.3 Optional Additional Analysis of Potential Critical Coarse Sediment Yield Areas Onsite ☐ No optional analyses performed, the project will avoid critical coarse sediment yield areas identified based on WMAA maps If optional analyses were performed, what is the final result? ☐ No critical coarse sediment yield areas to be protected based on verification of GLUs onsite ☐ Critical coarse sediment yield areas exist but additional analysis has determined that protection is not required. Documentation attached in Attachment 2.b of the WQTR. ☐ Critical coarse sediment yield areas exist and require protection. The project will implement management measures described in Sections 6.2.4 and 6.2.5 as applicable, and the areas are identified on the WQTR Exhibit. Discussion / Additional Information:

Form 1
Flow Control for Post-Project Runoff*   ***This Section only required if hydromodification management requirements apply**
List and describe point(s) of compliance (POCs) for flow control for hydromodification management (see Section 6.3.1). For each POC, provide a POC identification name or number correlating to the project's HMP Exhibit and a receiving channel identification name or number correlating to the project's HMP Exhibit.   POC – The POC for the project connects to a storm drain system that discharges to the railroad corridor just east of Highway 101. Refer to Hydromodification study for further information.
Has a geomorphic assessment been performed for the receiving channel(s)?   ☐ No, the low flow threshold is 0.1Q2 (default low flow threshold)   ☐ Yes, the result is the low flow threshold is 0.1Q2   ☐ Yes, the result is the low flow threshold is 0.3Q2   ☒ Yes, the result is the low flow threshold is 0.5Q2   If a geomorphic assessment has been performed, provide title, date, and preparer: The estimate is a 0.5Q2 low flow threshold for the outlet, as assessed in the study by Chang Consultants entitled "HYDROMODIFICATION SCREENING FOR SOLANA BEACH 101" dated June 13, 2017.   Discussion / Additional Information: (optional)
Other Site Requirements and Constraints
When applicable, list other site requirements or constraints that will influence storm water management design, such as zoning requirements including setbacks and open space, or local codes governing minimum street width, sidewalk construction, allowable pavement types, and drainage requirements.
Optional Additional Information or Continuation of Previous Sections As Needed
This space provided for additional information or continuation of information from previous sections as needed.

Source Control BMP Checklist for All Development Projects	Form 2 (PDPs) City of Solana Beach BMP Design Manual

Project Identification

Project Name: **Solana Beach 101**

Case No.: **17-14-08**

Source Control BMPs

All development projects must implement source control BMPs SC-1 through SC-6 where applicable and feasible. See Chapter 4 and Appendix E of the Model BMP Design Manual for information to implement source control BMPs shown in this checklist.

Answer each category below pursuant to the following.

- "Yes" means the project will implement the source control BMP as described in Chapter 4 and/or Appendix E of the Model BMP Design Manual. Discussion / justification is not required.
- "No" means the BMP is applicable to the project but it is not feasible to implement. Discussion / justification must be provided.
- "N/A" means the BMP is not applicable at the project site because the project does not include the feature that is addressed by the BMP (e.g., the project has no outdoor materials storage areas). Discussion / justification may be provided.

Source Control Requirement	Applied?		
SC-1 Prevention of Illicit Discharges into the MS4	☒ Yes	☐ No	☐ N/A
Discussion / justification if SC-1 not implemented:			
SC-2 Storm Drain Stenciling or Signage	☒ Yes	☐ No	☐ N/A
Discussion / justification if SC-2 not implemented:			
SC-3 Protect Outdoor Materials Storage Areas from Rainfall, Run-On, Runoff, and Wind Dispersal	☐ Yes	☐ No	☒ N/A
Discussion / justification if SC-3 not implemented:			
SC-4 Protect Materials Stored in Outdoor Work Areas from Rainfall, Run-On, Runoff, and Wind Dispersal	☐ Yes	☐ No	☒ N/A
Discussion / justification if SC-4 not implemented: No outdoor work areas planned.			

Form 2			
Source Control Requirement	**Applied?**		
SC-5 Protect Trash Storage Areas from Rainfall, Run-On, Runoff, and Wind Dispersal	☒ Yes	☐ No	☐ N/A
Discussion / justification if SC-5 not implemented:			
SC-6 Additional BMPs Based on Potential Sources of Runoff Pollutants (must answer for each source listed below)			
☐ On-site storm drain inlets	☐ Yes	☐ No	☒ N/A
☐ Interior floor drains and elevator shaft sump pumps	☒ Yes	☐ No	☐ N/A
☐ Interior parking garages	☒ Yes	☐ No	☐ N/A
☐ Need for future indoor & structural pest control	☒ Yes	☐ No	☐ N/A
☐ Landscape/Outdoor Pesticide Use	☒ Yes	☐ No	☐ N/A
☐ Pools, spas, ponds, decorative fountains, and other water features	☐ Yes	☐ No	☒ N/A
☐ Food service	☒ Yes	☐ No	☐ N/A
☐ Refuse areas	☒ Yes	☐ No	☐ N/A
☐ Industrial processes	☐ Yes	☐No	☒ N/A
☐ Outdoor storage of equipment or materials	☐ Yes	☐ No	☒ N/A
☐ Vehicle and Equipment Cleaning	☐ Yes	☐ No	☒ N/A
☐ Vehicle/Equipment Repair and Maintenance	☐ Yes	☐ No	☒ N/A
☐ Fuel Dispensing Areas	☐ Yes	☐ No	☒ N/A
☐ Loading Docks	☒ Yes	☐ No	☐ N/A
☐ Fire Sprinkler Test Water	☒ Yes	☐ No	☐ N/A
☐ Miscellaneous Drain or Wash Water	☒ Yes	☐ No	☐ N/A
☐ Plazas, sidewalks, and parking lots	☒ Yes	☐ No	☐ N/A
Discussion / justification if SC-6 not implemented. Clearly identify which sources of runoff pollutants are discussed. Justification must be provided for all "No" answers shown above.			

Site Design BMP Checklist for All Development Projects	Form 3 (PDPs) City of Solana Beach BMP Design Manual

Project Identification

Project Name: **Solana Beach 101**

Case No.: 17-14-08

Site Design BMPs

All development projects must implement site design BMPs SD-1 through SD-8 where applicable and feasible. See Chapter 4 and Appendix E of the Model BMP Design Manual for information to implement site design BMPs shown in this checklist.

Answer each category below pursuant to the following.

- "Yes" means the project will implement the site design BMP as described in Chapter 4 and/or Appendix E of the Model BMP Design Manual. Discussion / justification is not required.
- "No" means the BMP is applicable to the project but it is not feasible to implement. Discussion / justification must be provided.
- "N/A" means the BMP is not applicable at the project site because the project does not include the feature that is addressed by the BMP (e.g., the project site has no existing natural areas to conserve). Discussion / justification may be provided.

Site Design Requirement	Applied?		
SD-1 Maintain Natural Drainage Pathways and Hydrologic Features	☐Yes	☐ No	☒ N/A
Discussion / justification if SD-1 not implemented: Project is an urban redevelopment; there are no natural drainage pathways to preserve.			
SD-2 Conserve Natural Areas, Soils, and Vegetation	☐Yes	☐ No	☒ N/A
Discussion / justification if SD-2 not implemented: Since the project is a redevelopment in an urban area there are no natural areas of vegetation to conserve.			
SD-3 Minimize Impervious Area	☐Yes	☐ No	☒ N/A
Discussion / justification if SD-3 not implemented:			
SD-4 Minimize Soil Compaction	☐ Yes	☐ No	☒ N/A
Discussion / justification if SD-4 not implemented:			
SD-5 Impervious Area Dispersion	☒ Yes	☐ No	☐ N/A
Discussion / justification if SD-5 not implemented:			

Form 3			
Site Design Requirement	**Applied?**		
SD-6 Runoff Collection	☐Yes	☐ No	☒ N/A
Discussion / justification if SD-6 not implemented:			
SD-7 Landscaping with Native or Drought Tolerant Species	☒Yes	☐ No	☐ N/A
Discussion / justification if SD-7 not implemented:			
SD-8 Harvesting and Using Precipitation	☐ Yes	☒ No	☐ N/A
Discussion / justification if SD-8 not implemented: SD-8 found to not be applicable to project. Refer to calculations in attachment 1c. The 36-hour wet season demand is not higher than the design capture volume for the project and is therefore considered an infeasible site requirement.			

Summary of PDP Structural BMPs	Form 4 City of Solana Beach Design Manual

Project Identification

Project Name: **Solana Beach 101**

Permit Application Number: **17-14-08**

PDP Structural BMPs

All PDPs must implement structural BMPs for storm water pollutant control (see Chapter 5 of the BMP Design Manual). Selection of PDP structural BMPs for storm water pollutant control must be based on the selection process described in Chapter 5. PDPs subject to hydromodification management requirements must also implement structural BMPs for flow control for hydromodification management (see Chapter 6 of the BMP Design Manual). Both storm water pollutant control and flow control for hydromodification management can be achieved within the same structural BMP(s).

PDP structural BMPs must be verified by the local jurisdiction at the completion of construction. This may include requiring the project owner or project owner's representative and engineer of record to certify construction of the structural BMPs (see Section 1.12 of the BMP Design Manual). PDP structural BMPs must be maintained into perpetuity, and the local jurisdiction must confirm the maintenance (see Section 7 of the BMP Design Manual).

Use this form to provide narrative description of the general strategy for structural BMP implementation at the project site in the box below. Then complete the PDP structural BMP summary information sheet (page 3 of this form) for each structural BMP within the project (copy the BMP summary information page as many times as needed to provide summary information for each individual structural BMP).

Describe the general strategy for structural BMP implementation at the site. This information must describe how the steps for selecting and designing storm water pollutant control BMPs presented in Section 5.1 of the BMP Design Manual were followed, and the results (type of BMPs selected). For projects requiring hydromodification flow control BMPs, indicate whether pollutant control and flow control BMPs are integrated or separate.

Form 4
The contracted geotechnical consultant, NOVA Services, Inc. recommended in their Planning Phase Infiltration Suitability Assessment (dated 10/17/16) the use of lined, no-infiltration storm water management BMPs. In their report they concluded the project site was a no infiltration condition site per their completed Categorization of Infiltration Feasibility Condition Worksheet C.4-1 (refer to Attachment 1d). Per Form 5 located in Attachment 1c, Harvest and Use BMPs were determined to be infeasible for the project site as well. Refer to the Drainage Management Area (DMA) Exhibit in Attachment 1a,b for the locations of the proposed pollutant control treatment BMPs. There are seven raised biofiltration planter BMPs with nutrient sensitive media (BF-2) proposed to treat the onsite runoff. All BMPs will be located on the outside edge of the project boundary due to the entire project being over structure. There will be four BMP planters located along Highway 101 to treat the eastern third of the site (consisting of DMA 1 to 4). Runoff collected via roof drains and area drains throughout the plaza will be pumped or drained via gravity into these BMP planters. There will be two biofiltration planters along Dahlia Drive (treating DMAs 5 and 6) and another along South Sierra Avenue (treating DMA 7). These BMP planters will collect runoff from roof/area drains and will discharge towards its adjacent street gutters via curb outlets. The total drainage management area consists of the areas within the property boundary that can be treated by onsite pollutant treatment control BMPs. Refer to the DMA exhibit for areas that are considered either self-mitigating or de minimis and are not treated by pollutant control BMPs. All planters and landscaping along the perimeter of the project boundary, excluding the BMP planters, are considered self-mitigating. The DMA exhibit shows the de minimis areas which consist of less than 2 percent (4132 SF) of the total proposed impervious area (71,745 SF overall) for the project. All excess disturbed area outside of the property boundary falls under the “reconfiguration of existing streets exemption” and does not require treatment (for example, replacing sidewalk and curb along the perimeter of the project). The calculations are included in Attachment 1e for the biofiltration planter sizing. It establishes the factor that can be used to calculate the absolute minimum BMP surface area that would provide the required volume reduction per the MS4 permit. The calculations provided in Attachment 1e show each BMP planter has a larger footprint than the minimum footprint calculated using the alternative minimum sizing factor method and meets the treatment requirements for biofiltration.

Form 4	
Structural BMP Summary Information **(Copy this page as needed to provide information for each individual proposed structural BMP)**	
Structural BMP ID No. BF#1	
Construction Plan Sheet No.	
Type of structural BMP: ☐ Retention by harvest and use (HU-1) ☐ Retention by infiltration basin (INF-1) ☐ Retention by bioretention (INF-2) ☐ Retention by permeable pavement (INF-3) ☐ Partial retention by biofiltration with partial retention (PR-1) ☐ Biofiltration (BF-1) ☒ Biofiltration with Nutrient Sensitive Media Design (BF-2) ☐ Proprietary Biofiltration (BF-3) meeting all requirements of Appendix F ☐ Flow-thru treatment control with prior lawful approval to meet earlier PDP requirements (provide BMP type/description in discussion section below) ☐ Flow-thru treatment control included as pre-treatment/forebay for an onsite retention or biofiltration BMP (provide BMP type/description and indicate which onsite retention or biofiltration BMP it serves in discussion section below) ☐ Flow-thru treatment control with alternative compliance (provide BMP type/description in discussion section below) ☐ Detention pond or vault for hydromodification management ☐ Other (describe in discussion section below)	
Purpose: ☐ Pollutant control only ☐ Hydromodification control only ☒ Combined pollutant control and hydromodification control ☐ Pre-treatment/forebay for another structural BMP ☐ Other (describe in discussion section below)	
Who will certify construction of this BMP? Provide name and contact information for the party responsible to sign BMP verification forms if required by the City Engineer (See Section 1.12 of the BMP Design Manual)	Project Design Consultants 619-235-6471
Who will be the final owner of this BMP?	Solana Beach 101 Development Management
Who will maintain this BMP into perpetuity?	Solana Beach 101 Development Management
What is the funding mechanism for maintenance?	Funding from development patrons

Form 4	
Structural BMP Summary Information **(Copy this page as needed to provide information for each individual proposed structural BMP)**	
Structural BMP ID No. BF#2	
Construction Plan Sheet No.	
Type of structural BMP: ☐ Retention by harvest and use (HU-1) ☐ Retention by infiltration basin (INF-1) ☐ Retention by bioretention (INF-2) ☐ Retention by permeable pavement (INF-3) ☐ Partial retention by biofiltration with partial retention (PR-1) ☐ Biofiltration (BF-1) ☒ Biofiltration with Nutrient Sensitive Media Design (BF-2) ☐ Proprietary Biofiltration (BF-3) meeting all requirements of Appendix F ☐ Flow-thru treatment control with prior lawful approval to meet earlier PDP requirements (provide BMP type/description in discussion section below) ☐ Flow-thru treatment control included as pre-treatment/forebay for an onsite retention or biofiltration BMP (provide BMP type/description and indicate which onsite retention or biofiltration BMP it serves in discussion section below) ☐ Flow-thru treatment control with alternative compliance (provide BMP type/description in discussion section below) ☐ Detention pond or vault for hydromodification management ☐ Other (describe in discussion section below)	
Purpose: ☐ Pollutant control only ☐ Hydromodification control only ☒ Combined pollutant control and hydromodification control ☐ Pre-treatment/forebay for another structural BMP ☐ Other (describe in discussion section below)	
Who will certify construction of this BMP? Provide name and contact information for the party responsible to sign BMP verification forms if required by the City Engineer (See Section 1.12 of the BMP Design Manual)	Project Design Consultants 619-235-6471
Who will be the final owner of this BMP?	Solana Beach 101 Development Management
Who will maintain this BMP into perpetuity?	Solana Beach 101 Development Management
What is the funding mechanism for maintenance?	Funding from development patrons

Form 4	
Structural BMP Summary Information **(Copy this page as needed to provide information for each individual proposed structural BMP)**	
Structural BMP ID No. BF#3	
Construction Plan Sheet No.	
Type of structural BMP: ☐ Retention by harvest and use (HU-1) ☐ Retention by infiltration basin (INF-1) ☐ Retention by bioretention (INF-2) ☐ Retention by permeable pavement (INF-3) ☐ Partial retention by biofiltration with partial retention (PR-1) ☐ Biofiltration (BF-1) ☒ Biofiltration with Nutrient Sensitive Media Design (BF-2) ☐ Proprietary Biofiltration (BF-3) meeting all requirements of Appendix F ☐ Flow-thru treatment control with prior lawful approval to meet earlier PDP requirements (provide BMP type/description in discussion section below) ☐ Flow-thru treatment control included as pre-treatment/forebay for an onsite retention or biofiltration BMP (provide BMP type/description and indicate which onsite retention or biofiltration BMP it serves in discussion section below) ☐ Flow-thru treatment control with alternative compliance (provide BMP type/description in discussion section below) ☐ Detention pond or vault for hydromodification management ☐ Other (describe in discussion section below)	
Purpose: ☐ Pollutant control only ☐ Hydromodification control only ☒ Combined pollutant control and hydromodification control ☐ Pre-treatment/forebay for another structural BMP ☐ Other (describe in discussion section below)	
Who will certify construction of this BMP? Provide name and contact information for the party responsible to sign BMP verification forms if required by the City Engineer (See Section 1.12 of the BMP Design Manual)	Project Design Consultants 619-235-6471
Who will be the final owner of this BMP?	Solana Beach 101 Development Management
Who will maintain this BMP into perpetuity?	Solana Beach 101 Development Management
What is the funding mechanism for maintenance?	Funding from development patrons

Form 4	
Structural BMP Summary Information **(Copy this page as needed to provide information for each individual proposed structural BMP)**	
Structural BMP ID No. BF#4	
Construction Plan Sheet No.	
Type of structural BMP: ☐ Retention by harvest and use (HU-1) ☐ Retention by infiltration basin (INF-1) ☐ Retention by bioretention (INF-2) ☐ Retention by permeable pavement (INF-3) ☐ Partial retention by biofiltration with partial retention (PR-1) ☐ Biofiltration (BF-1) ☒ Biofiltration with Nutrient Sensitive Media Design (BF-2) ☐ Proprietary Biofiltration (BF-3) meeting all requirements of Appendix F ☐ Flow-thru treatment control with prior lawful approval to meet earlier PDP requirements (provide BMP type/description in discussion section below) ☐ Flow-thru treatment control included as pre-treatment/forebay for an onsite retention or biofiltration BMP (provide BMP type/description and indicate which onsite retention or biofiltration BMP it serves in discussion section below) ☐ Flow-thru treatment control with alternative compliance (provide BMP type/description in discussion section below) ☐ Detention pond or vault for hydromodification management ☐ Other (describe in discussion section below)	
Purpose: ☐ Pollutant control only ☐ Hydromodification control only ☒ Combined pollutant control and hydromodification control ☐ Pre-treatment/forebay for another structural BMP ☐ Other (describe in discussion section below)	
Who will certify construction of this BMP? Provide name and contact information for the party responsible to sign BMP verification forms if required by the City Engineer (See Section 1.12 of the BMP Design Manual)	Project Design Consultants 619-235-6471
Who will be the final owner of this BMP?	Solana Beach 101 Development Management
Who will maintain this BMP into perpetuity?	Solana Beach 101 Development Management
What is the funding mechanism for maintenance?	Funding from development patrons

Form 4	
Structural BMP Summary Information **(Copy this page as needed to provide information for each individual proposed structural BMP)**	
Structural BMP ID No. BF#5	
Construction Plan Sheet No.	
Type of structural BMP: ☐ Retention by harvest and use (HU-1) ☐ Retention by infiltration basin (INF-1) ☐ Retention by bioretention (INF-2) ☐ Retention by permeable pavement (INF-3) ☐ Partial retention by biofiltration with partial retention (PR-1) ☐ Biofiltration (BF-1) ☒ Biofiltration with Nutrient Sensitive Media Design (BF-2) ☐ Proprietary Biofiltration (BF-3) meeting all requirements of Appendix F ☐ Flow-thru treatment control with prior lawful approval to meet earlier PDP requirements (provide BMP type/description in discussion section below) ☐ Flow-thru treatment control included as pre-treatment/forebay for an onsite retention or biofiltration BMP (provide BMP type/description and indicate which onsite retention or biofiltration BMP it serves in discussion section below) ☐ Flow-thru treatment control with alternative compliance (provide BMP type/description in discussion section below) ☐ Detention pond or vault for hydromodification management ☐ Other (describe in discussion section below)	
Purpose: ☒ Pollutant control only ☐ Hydromodification control only ☐ Combined pollutant control and hydromodification control ☐ Pre-treatment/forebay for another structural BMP ☐ Other (describe in discussion section below)	
Who will certify construction of this BMP? Provide name and contact information for the party responsible to sign BMP verification forms if required by the City Engineer (See Section 1.12 of the BMP Design Manual)	Project Design Consultants 619-235-6471
Who will be the final owner of this BMP?	Solana Beach 101 Development Management
Who will maintain this BMP into perpetuity?	Solana Beach 101 Development Management
What is the funding mechanism for maintenance?	Funding from development patrons

Form 4	
Structural BMP Summary Information **(Copy this page as needed to provide information for each individual proposed structural BMP)**	
Structural BMP ID No. BF#6	
Construction Plan Sheet No.	
Type of structural BMP: ☐ Retention by harvest and use (HU-1) ☐ Retention by infiltration basin (INF-1) ☐ Retention by bioretention (INF-2) ☐ Retention by permeable pavement (INF-3) ☐ Partial retention by biofiltration with partial retention (PR-1) ☐ Biofiltration (BF-1) ☒ Biofiltration with Nutrient Sensitive Media Design (BF-2) ☐ Proprietary Biofiltration (BF-3) meeting all requirements of Appendix F ☐ Flow-thru treatment control with prior lawful approval to meet earlier PDP requirements (provide BMP type/description in discussion section below) ☐ Flow-thru treatment control included as pre-treatment/forebay for an onsite retention or biofiltration BMP (provide BMP type/description and indicate which onsite retention or biofiltration BMP it serves in discussion section below) ☐ Flow-thru treatment control with alternative compliance (provide BMP type/description in discussion section below) ☐ Detention pond or vault for hydromodification management ☐ Other (describe in discussion section below)	
Purpose: ☒ Pollutant control only ☐ Hydromodification control only ☐ Combined pollutant control and hydromodification control ☐ Pre-treatment/forebay for another structural BMP ☐ Other (describe in discussion section below)	
Who will certify construction of this BMP? Provide name and contact information for the party responsible to sign BMP verification forms if required by the City Engineer (See Section 1.12 of the BMP Design Manual)	Project Design Consultants 619-235-6471
Who will be the final owner of this BMP?	Solana Beach 101 Development Management
Who will maintain this BMP into perpetuity?	Solana Beach 101 Development Management
What is the funding mechanism for maintenance?	Funding from development patrons

Form 4
Structural BMP Summary Information **(Copy this page as needed to provide information for each individual proposed structural BMP)**
Structural BMP ID No. BF#7
Construction Plan Sheet No.
Type of structural BMP: ☐ Retention by harvest and use (HU-1) ☐ Retention by infiltration basin (INF-1) ☐ Retention by bioretention (INF-2) ☐ Retention by permeable pavement (INF-3) ☐ Partial retention by biofiltration with partial retention (PR-1) ☐ Biofiltration (BF-1) ☒ Biofiltration with Nutrient Sensitive Media Design (BF-2) ☐ Proprietary Biofiltration (BF-3) meeting all requirements of Appendix F ☐ Flow-thru treatment control with prior lawful approval to meet earlier PDP requirements (provide BMP type/description in discussion section below) ☐ Flow-thru treatment control included as pre-treatment/forebay for an onsite retention or biofiltration BMP (provide BMP type/description and indicate which onsite retention or biofiltration BMP it serves in discussion section below) ☐ Flow-thru treatment control with alternative compliance (provide BMP type/description in discussion section below) ☐ Detention pond or vault for hydromodification management ☐ Other (describe in discussion section below)
Purpose: ☒ Pollutant control only ☐ Hydromodification control only ☐ Combined pollutant control and hydromodification control ☐ Pre-treatment/forebay for another structural BMP ☐ Other (describe in discussion section below)

Who will certify construction of this BMP? Provide name and contact information for the party responsible to sign BMP verification forms if required by the City Engineer (See Section 1.12 of the BMP Design Manual)	Project Design Consultants 619-235-6471
Who will be the final owner of this BMP?	Solana Beach 101 Development Management
Who will maintain this BMP into perpetuity?	Solana Beach 101 Development Management
What is the funding mechanism for maintenance?	Funding from development patrons

Form 4
Structural BMP Summary Information **(Copy this page as needed to provide information for each individual proposed structural BMP)**
Structural BMP ID No. BF#8
Construction Plan Sheet No.
Type of structural BMP: ☐ Retention by harvest and use (HU-1) ☐ Retention by infiltration basin (INF-1) ☐ Retention by bioretention (INF-2) ☐ Retention by permeable pavement (INF-3) ☐ Partial retention by biofiltration with partial retention (PR-1) ☐ Biofiltration (BF-1) ☒ Biofiltration with Nutrient Sensitive Media Design (BF-2) ☐ Proprietary Biofiltration (BF-3) meeting all requirements of Appendix F ☐ Flow-thru treatment control with prior lawful approval to meet earlier PDP requirements (provide BMP type/description in discussion section below) ☐ Flow-thru treatment control included as pre-treatment/forebay for an onsite retention or biofiltration BMP (provide BMP type/description and indicate which onsite retention or biofiltration BMP it serves in discussion section below) ☐ Flow-thru treatment control with alternative compliance (provide BMP type/description in discussion section below) ☐ Detention pond or vault for hydromodification management ☐ Other (describe in discussion section below)
Purpose: ☒ Pollutant control only ☐ Hydromodification control only ☐ Combined pollutant control and hydromodification control ☐ Pre-treatment/forebay for another structural BMP ☐ Other (describe in discussion section below)

Who will certify construction of this BMP? Provide name and contact information for the party responsible to sign BMP verification forms if required by the City Engineer (See Section 1.12 of the BMP Design Manual)	Project Design Consultants 619-235-6471
Who will be the final owner of this BMP?	Solana Beach 101 Development Management
Who will maintain this BMP into perpetuity?	Solana Beach 101 Development Management
What is the funding mechanism for maintenance?	Funding from development patrons

ATTACHMENT 1
BACKUP FOR PDP POLLUTANT CONTROL BMPS

This is the cover sheet for Attachment 1.

Indicate which Items are Included behind this cover sheet:

Attachment Sequence	**Contents**	**Checklist**
Attachment 1a	DMA Exhibit (Required) See DMA Exhibit Checklist on the back of this Attachment cover sheet.	☒ Included
Attachment 1b	Tabular Summary of DMAs Showing DMA ID matching DMA Exhibit, DMA Area, and DMA Type (Required)* *Provide table in this Attachment OR on DMA Exhibit in Attachment 1a	☒ Included on DMA Exhibit in Attachment 1a ☐ Included as Attachment 1b, separate from DMA Exhibit
Attachment 1c	Form 5, Harvest and Use Feasibility Screening Checklist (Required unless the entire project will use infiltration BMPs) Refer to Appendix B.3-1 of the BMP Design Manual to complete Form 5.	☒ Included ☐ Not included because the entire project will use infiltration BMPs
Attachment 1d	Form 6, Categorization of Infiltration Feasibility Condition (Required unless the project will use harvest and use BMPs) Refer to Appendices C and D of the BMP Design Manual to complete Form 6.	☒ Included ☐ Not included because the entire project will use harvest and use BMPs
Attachment 1e	Pollutant Control BMP Design Worksheets / Calculations (Required) Refer to Appendices B and E of the BMP Design Manual for structural pollutant control BMP design guidelines	☒ Included

Use this checklist to ensure the required information has been included on the DMA Exhibit:

The DMA Exhibit must identify:

☒ Underlying hydrologic soil group
☐ Approximate depth to groundwater
☐ Existing natural hydrologic features (watercourses, seeps, springs, wetlands)
☐ Critical coarse sediment yield areas to be protected
☒ Existing topography and impervious areas
☒ Existing and proposed site drainage network and connections to drainage offsite
☒ Proposed demolition
☒ Proposed grading
☒ Proposed impervious features
☒ Proposed design features and surface treatments used to minimize imperviousness
☒ Drainage management area (DMA) boundaries, DMA ID numbers, and DMA areas (square footage or acreage), and DMA type (i.e., drains to BMP, self-retaining, or self-mitigating)
☒ Potential pollutant source areas and corresponding required source controls (see Chapter 4, Appendix E.1, and Form I-3B)
☒ Structural BMPs (identify location, type of BMP, and size/detail)

ATTACHMENT 1a,b
DMA Exhibit, Tabular Summary of DMAs

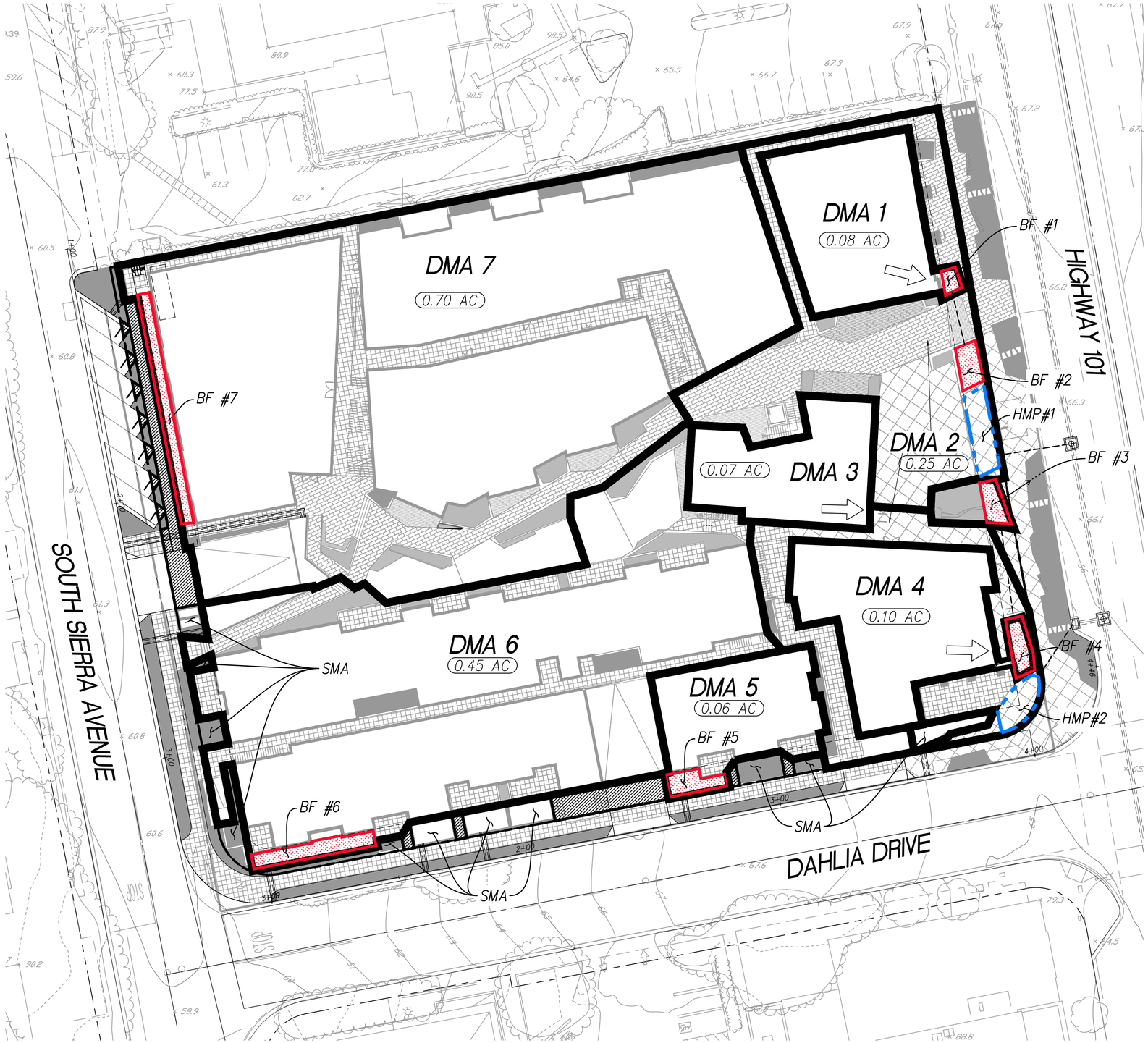

LEGEND

- PROPERTY BOUNDARY
- DRAINAGE SUBAREA
- BIOFILTRATION PLANTER
- UNDERGROUND HMP STOR. (MIN EXT)
- DE MINIMIS AREAS
- FLOW DIRECTION
- SELF MITIGATING AREA — SMA

TABULAR SUMMARY OF DMAs

DMA #	BMP ID	DMA TYPE	TOTAL DMA AREA (AC.)	PERVIOUS AREA (AC.)	PERVIOUS AREA (%)	IMPERVIOUS AREA (AC.)	IMPERVIOUS AREA (%)
1	BF#1	DRAINS TO BIOFILTRATION PLANTER (BF-2)*	0.08	0.00	4	0.05	96
2	BF#2	"	0.25	0.01	5	0.24	95
3	BF#3	"	0.07	0.01	12	0.06	88
4	BF#4	"	0.10	0.01	4	0.16	96
5	BF#5	"	0.06	0.00	6	0.06	94
6	BF#6	"	0.45	0.04	8	0.41	92
7	BF#7	"	0.70	0.03	4	0.67	96

*BIOFILTRATION PLANTER CONTAINING NUTRIENT SENSITIVE MEDIA

NOTE: FOR MORE INFORMATION ON SELF-MITIGATING AND DE MINIMIS AREAS REFER TO FORM 7 OF STORM WATER QUALITY MANAGEMENT PLAN.

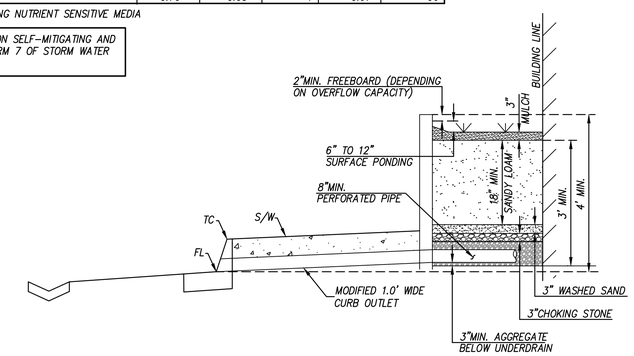

TYPICAL SECTION OF BIOFILTRATION PLANTER BMP

N.T.S.

BMP NOTES:

1. SITE DESIGN BMPS INCLUDE:
   - IMPERVIOUS AREA DISPERSION
   - LANDSCAPING WITH NATIVE OR DROUGHT TOLERANT SPECIES
2. SOURCE CONTROL BMPs FOR PROJECT INCLUDE:
   - PREVENTION OF ILLICIT DISCHARGES INTO THE MS4
   - STORM DRAIN STENCILING
   - PROTECT TRASH STORAGE AREAS FROM RAINFALL, RUN-ON, RUNOFF, AND WIND DISPERSAL
   - ADDITIONAL BMPs BASED ON POTENTIAL SOURCES OF RUNOFF POLLUTANTS (REFER TO FORM 2 SECTION SC-6 OF THE WQTR FOR MORE INFORMATION).
3. THE TREATMENT BMPs SELECTED FOR THIS PROJECT ARE SEVEN BIOFILTRATION PLANTERS WITH NUTRIENT SENSITIVE MEDIA. THE BMPS ARE PRIVATE AND WILL BE MAINTAINED BY THE PROPERTY OWNER.
4. WEST SIDE OF PROJECT SITE IS EXEMPT FROM HYDROMODIFICATION REQUIREMENTS. EAST SIDE OF PROJECT SITE IS SUBJECT TO HYDROMODIFICATION COMPLIANCE.
5. THE GEOTECHNICAL ENGINEER HAS CLASSIFIED THE PROJECT AS A "NO INFILTRATION" CONDITION SITE.

GENERAL NOTES:

- THE SOILS IN THE PROJECT SITE ARE CLASSIFIED AS SOIL TYPE B PER THE NRCS WEB SOIL SURVEY.
- NO GROUNDWATER WAS LOCATED ON SITE. HOWEVER GROUNDWATER WAS ENCOUNTERED AT A DEPTH OF 25-30 FEET BELOW GROUND SURFACE AT A SITE LOCATED 0.4 MILES NORTH OF THE PROJECT. PER NOVA SERVICES, INC. GEOTECHNICAL REPORT DATED MAY 2012.

N

0 10 20 40 60

GRAPHICAL SCALE

SCALE: 1"=20'

JOB #: 4242.00

CREATED: 11/28/16

PREPARED BY:

PROJECT DESIGN CONSULTANTS
Planning | Landscape Architecture | Engineering | Survey
701 B Street, Suite 800
San Diego, CA 92101
619.235.6471 Tel
619.234.0349 Fax

CITY OF SOLANA BEACH

SOLANA BEACH 101

DMA EXHIBIT
ATTACHMENT 1A

ATTACHMENT 1c

Form 5: Harvest and Use Feasibility Checklist

Harvest and Use Feasibility Checklist	Form 5 (PDPs) City of Solana Beach BMP Design Manual

1. Is there a demand for harvested water (check all that apply) at the project site that is reliably present during the wet season?

☐ Toilet and urinal flushing
☒ Landscape irrigation
☐ Other:_____

2. If there is a demand; estimate the anticipated average wet season demand over a period of 36 hours. Guidance for planning level demand calculations for toilet/urinal flushing and landscape irrigation is provided in Section B.3.2.

12% PERVIOUS PROPOSED AREA
2.05 AC TRIBUTARY AREA → 0.12 (2.05) = 0.25 AC

[Provide a summary of calculations here]

MODERATE PLANT WATER USE : 1470 GAL/36 HR (0.25 AC) = 367.5 GAL (CF/7.48 GAL)
= 49 CF

3. Calculate the DCV using worksheet B-2.1.

DCV = 3393 (cubic feet)

DCV = (C x d x A x 3630) − TCV − RCV
= (0.80 x 0.57 x 2.05 x 3630) − 0 − 0

3a. Is the 36 hour demand greater than or equal to the DCV?	3b. Is the 36 hour demand greater than 0.25DCV but less than the full DCV?	3c. Is the 36 hour demand less than 0.25DCV?
☐ Yes / ☒ No ⇨ ⇩	☐ Yes / ☒ No ⇨ ⇩ 0.25 DCV = 0.25 (3393) = 848 CF	☒ Yes ⇩
Harvest and use appears to be feasible. Conduct more detailed evaluation and sizing calculations to confirm that DCV can be used at an adequate rate to meet drawdown criteria.	Harvest and use may be feasible. Conduct more detailed evaluation and sizing calculations to determine feasibility. Harvest and use may only be able to be used for a portion of the site, or (optionally) the storage may need to be upsized to meet long term capture targets while draining in longer than 36 hours.	Harvest and use is considered to be infeasible.

Is harvest and use feasible based on further evaluation?

☐ Yes, refer to Appendix E to select and size harvest and use BMPs.

☒ No, select alternate BMPs.

B.3.2 Harvested Water Demand Calculation

The following sections provide technical references and guidance for estimating the harvested water demand of a project. These references are intended to be used for the planning phase of a project for feasibility screening purposes.

B.3.2.1 Toilet and Urinal Flushing Demand Calculations

The following guidelines should be followed for computing harvested water demand from toilet and urinal flushing:

- If reclaimed water is planned for use for toilet and urinal flushing, then the demand for harvested storm water is equivalent to the total demand minus the reclaimed water supplied, and should be reduced by the amount of reclaimed water that is available during the wet season.
- Demand calculations for toilet and urinal flushing should be based on the average rate of use during the wet season for a typical year.
- Demand calculations should include changes in occupancy over weekends and around holidays and changes in attendance/enrollment over school vacation periods.
- For facilities with generally high demand, but periodic shut downs (e.g., for vacations, maintenance, or other reasons), a project specific analysis should be conducted to determine whether the long term storm water capture performance of the system can be maintained despite shut downs.
- Such an analysis should consider the statistical distributions of precipitation and demand, most importantly the relationship of demand to the wet seasons of the year.

Table B.3-1 provides planning level demand estimates for toilet and urinal flushing per resident, or employee, for a variety of project types. The per capita use per day is based on daily employee or resident usage. For non-residential types of development, the "visitor factor" and "student factor" (for schools) should be multiplied by the employee use to account for toilet and urinal usage for non-employees using facilities.

Table B.3-1. Toilet and Urinal Water Usage per Resident or Employee

Land Use Type	Toilet User Unit of Normalization	Per Capita Use per Day		Visitor Factor[4]	Water Efficiency Factor	Total Use per Resident or Employee
		Toilet Flushing[1, 2]	Urinals[3]			
Residential	Resident	18.5	NA	NA	0.5	9.3
Office	Employee (non-visitor)	9.0	2.27	1.1	0.5	7 (avg)
Retail	Employee (non-visitor)	9.0	2.11	1.4	0.5	
Schools	Employee (non-student)	6.7	3.5	6.4	0.5	33
Various Industrial Uses (excludes process water)	Employee (non-visitor)	9.0	2	1	0.5	5.5

1- Based on American Waterworks Association Research Foundation,1999. Residential End Uses of Water. Denver, CO: AWWARF
2 - Based on use of 3.45 gallons per flush and average number of per employee flushes per subsector, Table D-1 for MWD (Pacific Institute, 2003)
3 - Based on use of 1.6 gallons per flush, Table D-4 and average number of per employee flushes per subsector, Appendix D (Pacific Institute, 2003)
4 - Multiplied by the demand for toilet and urinal flushing for the project to account for visitors. Based on proportion of annual use allocated to visitors and others (includes students for schools; about 5 students per employee) for each subsector in Table D-1 and D-4 (Pacific Institute, 2003)
5 – Accounts for requirements to use ultra-low flush toilets in new development projects; assumed that requirements will reduce toilet and urinal flushing demand by half on average compared to literature estimates. Ultra-low flush toilets are required in all new construction in California as of January 1, 1992. Ultra-low flush toilets must use no more than 1.6 gallons per flush and Ultra low flush urinals must use no more than 1 gallon per flush. Note: If zero flush urinals are being used, adjust accordingly.

B.3.2.2 General Requirements for Irrigation Demand Calculations

The following guidelines should be followed for computing harvested water demand from landscape irrigation:

- If reclaimed water is planned for use for landscape irrigation, then the demand for harvested storm water should be reduced by the amount of reclaimed water that is available during the wet season.
- Irrigation rates should be based on the irrigation demand exerted by the types of landscaping that are proposed for the project, with consideration for water conservation requirements.
- Irrigation rates should be estimated to reflect the average wet season rates (defined as Octoberthrough April) accounting for the effect of storm events in offsetting harvested water demand. In the absence of a detailed demand study, it should be assumed that irrigation demand is not present during days with greater than 0.1 inches of rain and the subsequent 3-day period. This irrigation shutdown period is consistent with standard practice in land application of wastewater and is applicable to storm water to prevent irrigation from resulting

in dry weather runoff. Based on a statistical analysis of San Diego County rainfall patterns, approximately 30 percent of wet season days would not have a demand for irrigation.

- If land application of storm water is proposed (irrigation in excess of agronomic demand), then this BMP must be considered to be an infiltration BMP and feasibility screening for infiltration must be conducted. In addition, it must be demonstrated that land application would not result in greater quantities of runoff as a result of saturated soils at the beginning of storm events. Agronomic demand refers to the rate at which plants use water.

The following sections describe methods that should be used to calculate harvested water irrigation demand. While these methods are simplified, they provide a reasonable estimate of potential harvested water demand that is appropriate for feasibility analysis and project planning. These methods may be replaced by a more rigorous project-specific analysis that meets the intent of the criteria above.

B.3.2.2.1 Demand Calculation Method

This method is based on the San Diego Municipal Code Land Development Code Landscape Standards Appendix E which includes a formula for estimating a project's annual estimated total water use based on reference evaporation, plant factor, and irrigation efficiency.

For the purpose of calculating harvested water irrigation demand applicable to the sizing of harvest and use systems, the estimated total water use has been modified to reflect typical wet-season irrigation demand. This method assumes that the wet season is defined as October through April. This method further assumes that no irrigation water will be applied during days with precipitation totals greater than 0.1 inches or within the 3 days following such an event. Based on these assumptions and an analysis of Lake Wohlford, Lindbergh and Oceanside precipitation patterns, irrigation would not be applied during approximately 30 percent of days from October through April.

The following equation is used to calculate the Modified Estimated Total Water Usage:

$$\text{Modified ETWU} = ETo_{Wet} \times [[\Sigma(PF \times HA)/IE] + SLA] \times 0.015$$

Where:

Modified ETWU = Estimated daily average water usage during wet season
ETo_{Wet} = Average reference evapotranspiration from October through April (use 2.8 inches per month, using CIMS Zone 4 from Table G.1-1)
PF = Plant Factor

Table B.3-2. Planning Level Plant Factor Recommendations

Plant Water Use	Plant Factor	Also Includes
Low	< 0.1 – 0.2	Artificial Turf
Moderate	0.3 – 0.7	
High	0.8 and greater	Water features
Special Landscape Area	1.0	

HA = Hydrozone Area (sq-ft); A section or zone of the landscaped area having plants with similar water needs.
Σ(PF x HA) = The sum of PF x HA for each individual Hydrozone (accounts for different landscaping zones).
IE = Irrigation Efficiency (assume 90 percent for demand calculations)
SLA = Special Landscape Area (sq-ft); Areas used for active and passive recreation areas, areas solely dedicated to the production of fruits and vegetables, and areas irrigated with reclaimed water.

In this equation, the coefficient (0.015) accounts for unit conversions and shut down of irrigation during and for the three days following a significant precipitation event:

0.015 = (1 mo./30 days)×(1 ft./12 in)×(7.48 gal/cu-ft.)×(approximately 7 out of 10 days with irrigation demand from October through April)

B.3.2.2.2 Planning Level Irrigation Demands

To simplify the planning process, the method described above has been used to develop daily average wet season demands for a one-acre irrigated area based on the plant/landscape type. These demand estimates can be used to calculate the drawdown of harvest and use systems for the purpose of LID BMP sizing calculations.

Table B.3-3. Planning Level Irrigation Demand by Plant Factor and Landscape Type

General Landscape Type	36-Hour Planning Level Irrigation Demand (gallons per irrigated acre per 36 hour period)
Hydrozone – Low Plant Water Use	390
Hydrozone – Moderate Plant Water Use	1,470
Hydrozone – High Plant Water Use	2,640
Special Landscape Area	2,640

B.3.2.3 Calculating Other Harvested Water Demands

Calculations of other harvested water demands should be based on the knowledge of land uses, industrial processes, and other factors that are project-specific. Demand should be calculated based on the following guidelines:

- Demand calculations should represent actual demand that is anticipated during the wet season (October through April).
- Sources of demand should only be included if they are reliably and consistently present during the wet season.
- Where demands are substantial but irregular, a more detailed analysis should be conducted based on a statistical analysis of anticipated demand and precipitation patterns.

B.3.3 Sizing Harvest and Use BMPs

Sizing calculations shall demonstrate that one of two equivalent performance standards is met:

1. Harvest and use BMPs are sized to drain the tank in 36 hours following the end of rainfall. The size of the BMP is dependent on the demand (Section B.3.2) at the site.
2. Harvest and use BMP is designed to capture at least 80 percent of average annual (long term) runoff volume.

It is rare cisterns can be sized to capture the full DCV and use this volume in 36 hours. So when using Worksheet B.3-1 if it is determined that harvest and use BMP is feasible then the BMP should be sized to the estimated 36-hour demand.

ATTACHMENT 1d

- Form 6: Categorization of Feasibility Condition

-Planning Phase Infiltration Suitability Assessment Prepared by NOVA Services, Inc. dated October 2016

Worksheet C.4-1: Categorization of Infiltration Feasibility Condition

Categorization of Infiltration Feasibility Condition		Worksheet C.4-1	
Part 1 - Full Infiltration Feasibility Screening Criteria Would infiltration of the full design volume be feasible from a physical perspective without any undesirable consequences that cannot be reasonably mitigated?			
Criteria	Screening Question	Yes	No
1	Is the estimated reliable infiltration rate below proposed facility locations greater than 0.5 inches per hour? The response to this Screening Question shall be based on a comprehensive evaluation of the factors presented in Appendix C.2 and Appendix D.	X	
Provide basis: *Although for this planning phase preliminary assessment, NOVA did not perform an infiltration test as the site, based on the information obtained, the USDA classify the existing soils as hydrologic Soil Unit Group B. The geotechnical report for the site indicates that the soils consist of a loose to medium dense, sand to silty sand, these soils typically have infiltration rates that may range around 0.5 inches per hour.* Summarize findings of studies; provide reference to studies, calculations, maps, data sources, etc. Provide narrative discussion of study/data source applicability.			
2	Can infiltration greater than 0.5 inches per hour be allowed without increasing risk of geotechnical hazards (slope stability, groundwater mounding, utilities, or other factors) that cannot be mitigated to an acceptable level? The response to this Screening Question shall be based on a comprehensive evaluation of the factors presented in Appendix C.2.		X
Provide basis: *1. The proposed structures are planned to have two stories of underground parking, and planned to be constructed at 10 feet from the property lines in all sides, this condition will place the infiltration basins too close (within 10 feet) to the proposed underground parking retaining walls and foundations, potentially impacting lateral pressures and reduction of soil strength.* *2. Also the infiltration basins would have to be constructed too close to the property lines, with the potential of infiltrated water to migrate laterally and potentially encroaching into the adjacent property, properties downgradient and into the public right of way, potentially affecting negatively buildings and improvements in the adjacent properties and public right of way* *3. Saturation of the underlying damp, loose to medium dense soils by water infiltration can create geotechnically hazardous conditions including: settlement, consolidation, hydrocollapse, and potential for liquefaction that may affect the proposed structures and neighboring structures due to the potential of infiltrated water to migrate laterally.* Summarize findings of studies; provide reference to studies, calculations, maps, data sources, etc. Provide narrative discussion of study/data source applicability.			

Worksheet C.4-1 Page 2 of 4			
Criteria	Screening Question	Yes	No
3	Can infiltration greater than 0.5 inches per hour be allowed without increasing risk of groundwater contamination (shallow water table, storm water pollutants or other factors) that cannot be mitigated to an acceptable level? The response to this Screening Question shall be based on a comprehensive evaluation of the factors presented in Appendix C.3.		
Provide basis: *Water contamination was not evaluated at this time, although our research indicate a historic high groundwater of +41 feet above mean sea level. The subject site is located in an area where the existing elevations and proposed elevations range from +61 and +67 feet above means sea level, which places the historic groundwater at approximate depths of 20 and 26 feet below existing elevations.* Summarize findings of studies; provide reference to studies, calculations, maps, data sources, etc. Provide narrative discussion of study/data source applicability.			
4	Can infiltration greater than 0.5 inches per hour be allowed without causing potential water balance issues such as change of seasonality of ephemeral streams or increased discharge of contaminated groundwater to surface waters? The response to this Screening Question shall be based on a comprehensive evaluation of the factors presented in Appendix C.3.		
Provide basis: *The potential for water balance was not evaluated by NOVA Services.* Summarize findings of studies; provide reference to studies, calculations, maps, data sources, etc. Provide narrative discussion of study/data source applicability.			
Part 1 Result*	If all answers to rows 1 - 4 are "Yes" a full infiltration design is potentially feasible. The feasibility screening category is Full Infiltration If any answer from row 1-4 is "No", infiltration may be possible to some extent but would not generally be feasible or desirable to achieve a "full infiltration" design. Proceed to Part 2		

*To be completed using gathered site information and best professional judgment considering the definition of MEP in the MS4 Permit. Additional testing and/or studies may be required by City Engineer to substantiate findings.

Worksheet C.4-1 Page 3 of 4			
Part 2 – Partial Infiltration vs. No Infiltration Feasibility Screening Criteria Would infiltration of water in any appreciable amount be physically feasible without any negative consequences that cannot be reasonably mitigated?			
Criteria	Screening Question	Yes	No
5	Do soil and geologic conditions allow for infiltration in any appreciable rate or volume? The response to this Screening Question shall be based on a comprehensive evaluation of the factors presented in Appendix C.2 and Appendix D.	X	
Provide basis: *Although for this planning phase preliminary assessment, NOVA did not perform an infiltration test as the site, based on the information obtained, the USDA classify the existing soils as hydrologic Soil Unit Group B. The geotechnical report for the site indicates that the soils consist of a loose to medium dense, sand to silty sand, these soils typically have infiltration rates that may range around 0.5 inches per hour.* Summarize findings of studies; provide reference to studies, calculations, maps, data sources, etc. Provide narrative discussion of study/data source applicability and why it was not feasible to mitigate low infiltration rates.			
6	Can Infiltration in any appreciable quantity be allowed without increasing risk of geotechnical hazards (slope stability, groundwater mounding, utilities, or other factors) that cannot be mitigated to an acceptable level? The response to this Screening Question shall be based on a comprehensive evaluation of the factors presented in Appendix C.2.		X
Provide basis: *Review of the available references and plans for the site indicate that the potential areas for infiltration less than the recommended distance to property lines and retaining walls. As such, an infiltration rate cannot be allowed.* Summarize findings of studies; provide reference to studies, calculations, maps, data sources, etc. Provide narrative discussion of study/data source applicability and why it was not feasible to mitigate low infiltration rates.			

Worksheet C.4-1 Page 4 of 4			
Criteria	Screening Question	Yes	No
7	Can Infiltration in any appreciable quantity be allowed without posing significant risk for groundwater related concerns (shallow water table, storm water pollutants or other factors)? The response to this Screening Question shall be based on a comprehensive evaluation of the factors presented in Appendix C.3.		
Provide basis: *Water contamination was not evaluated at this time, as noted previously our research indicate a historic high groundwater of +41 feet above mean sea level. The subject site is located in an area where the existing elevations and proposed elevations range from +61 and +67 feet above means sea level, which places the historic groundwater at approximate depths of 20 and 26 feet below existing elevations.* Summarize findings of studies; provide reference to studies, calculations, maps, data sources, etc. Provide narrative discussion of study/data source applicability and why it was not feasible to mitigate low infiltration rates.			
8	Can infiltration be allowed without violating downstream water rights? The response to this Screening Question shall be based on a comprehensive evaluation of the factors presented in Appendix C.3.		
Provide basis: *Violation of downstream water rights , was not evaluated by NOVA* Summarize findings of studies; provide reference to studies, calculations, maps, data sources, etc. Provide narrative discussion of study/data source applicability and why it was not feasible to mitigate low infiltration rates.			
Part 2 Result*	If all answers from row 1-4 are yes then partial infiltration design is potentially feasible. The feasibility screening category is Partial Infiltration. If any answer from row 5-8 is no, then infiltration of any volume is considered to be infeasible within the drainage area. The feasibility screening category is No Infiltration.		

*To be completed using gathered site information and best professional judgment considering the definition of MEP in the MS4 Permit. Additional testing and/or studies may be required by City Engineer to substantiate findings

Planning Phase Infiltration Suitability Assessment
Solana 101 Mixed Use Project

Highway 101 and Dahlia Drive
Solana Beach, California

PREPARED FOR

Mr. Jim McMenamin
Zephyr Partners
700 2nd Street, Encinitas, CA 92024

PREPARED BY

NOVA Services, Inc.
4373 Viewridge Ave, Ste. B
San Diego, California 92123

NOVA Project No. 2016507
October 17, 2016

NOVA

GEOTECHNICAL ■ MATERIALS ■ SPECIAL INSPECTIONS

SBE ■ SLBE ■ SCOOP

4373 Viewridge Avenue, Ste. B
San Diego, CA 92123
858.292.7575

Mr. Jim McMenamin
Zephyr Partners
700 2nd Street
Encinitas, CA 92024

October 17, 2016
NOVA Project 2016507

Subject: Planning Phase Infiltration Suitability Assessment
Solana 101 Mixed Use Project
Northwest Corner of Highway 101 and Dahlia Drive
Solana Beach, California

Dear Mr. McMenamin:

NOVA Services, Inc. (NOVA) is pleased to present this DRAFT report for your review and comment. The work reported herein was completed by NOVA for Zephyr Partners in accordance with NOVA's proposal dated August 31, 2016.

NOVA appreciates the opportunity to be of service to Zephyr Partners on this most interesting project. Should you have any questions regarding this report or other matters, please do not hesitate to call.

Sincerely,
NOVA Services, Inc.

John F. O'Brien, P.E., G.E.
Principal Geotechnical Engineer

Hector G. Estrella, P.G.
Senior Project Geologist

REGISTERED PROFESSIONAL ENGINEER
JOHN F. O'BRIEN
651
EXP. 03-31-17
GEOTECHNICAL
STATE OF CALIFORNIA

PROFESSIONAL GEOLOGIST
HECTOR G. ESTRELLA
No.9019
STATE OF CALIFORNIA
Expires May. 31, 2017

Planning Phase Infiltration Suitability Assessment
Solana 101 Mixed Use Project
Highway 101 and Dahlia Drive
Solana Beach, California

Table of Contents

1.0 INTRODUCTION 1

1.1 Terms of Reference 1

1.2 Objective, Scope and Limitations of This Work 1
1.2.1 Objective 1
1.2.2 Scope 1
1.2.3 Limitations 1

1.3 Understood Use of This Report 1

1.4 Organization of This Report 2

2.0 PROJECT INFORMATION 3

2.1 Location 3

2.2 Proposed Development 3

2.3 Proposed Biofiltration Areas 3
2.3.1 General 3
2.3.2 Reference Design Standard 4

3.0 SITE CONDITIONS 5

3.1 Surface 5

3.2 Site Geology 6

3.3 Subsurface 6

3.4 Groundwater 6
3.4.1 Site Specific 6
3.4.2 Nearby Sites 6
3.4.3 Recommended High GWL for This Site 6

4.0 SITE EVALUATION 7

4.1 Overview 7

4.2 Review of Geotechnical Feasibility Criteria 7
4.2.1 Overview 7
4.2.2 Soil and Geologic Conditions 7
4.2.3 Settlement and Volume Change. 8
4.2.4 Slope Stability. 8
4.2.5 Utility Impacts 8
4.2.6 Groundwater Mounding 9
4.2.7 Retaining Walls and Foundations 9
4.2.8 Other Factors. 9

4.3 Review of Groundwater Quality and Water Balance Feasibility Criteria 9
4.3.1 General 9
4.3.2 Soil and Groundwater Contamination 9
4.3.3 Separation the Seasonal High Groundwater 9
4.3.4 Wellhead Protection 10
4.3.5 Contamination Risks from Land-Use Activities 10
4.3.6 Consultation with Applicable Groundwater Agencies 10
4.3.7 Water Balance Impacts on Streamflow 10
4.3.8 Downstream Water Rights 10

5.0 DISCUSSION AND RECOMMENDATIONS 11

5.1 Discussion 11
5.1.1 Preliminary Site Evaluation 11
5.1.2 Site Constraints 11
5.1.3 Categorization of Infiltration Feasibility Conditions. 12

5.2 Recommendations 12

6.0 REFERENCES 13

List of Appendices

Appendix A Categorization of Infiltration Feasibility Conditions
Appendix B Web Soil Survey

1.0 INTRODUCTION

1.1 Terms of Reference

This report presents the findings of a planning phase assessment of the suitability of permanent stormwater infiltration best management practices (BMP's) for the project currently known as the Solana 101 Mixed Use Development (hereafter, 'the development'). The project will be located at the northwest corner of Highway 101 and Dahlia Drive, Solana Beach, San Diego County, California (hereafter, 'the site).

The work reported herein was completed by NOVA for Zephyr Partners in accordance with NOVA's proposal dated August 31, 2016.

1.2 Objective, Scope and Limitations of This Work

1.2.1 Objective

The objective of the work reported herein is to utilize existing site data to provide planning phase assessment of the feasibility of developing permanent stormwater infiltration BMP's for the subject development.

1.2.2 Scope

In order to accomplish the above objective, NOVA's undertook the task-based scope of work described below.

- Task 1, Background Review. Review of background data, including geotechnical reports, fault investigation reports, topographic maps, geologic data, and fault maps. Preliminary development plans that include tentatively located storm water infiltration BMP's were also reviewed

- Task 2, Evaluations. Conducted geotechnical and hydrogeologic evaluations utilizing the information developed in Task 1.

- Task 3, Reporting. Preparation of this report provides NOVA's findings and recommendations.

1.2.3 Limitations

This report does not address any environmental matters; including, but not limited to assessment or investigation for the presence or absence of hazardous or toxic materials in the soil, groundwater, or surface water within or beyond the site.

1.3 Understood Use of This Report

NOVA understands that the findings and recommendations provided herein will be utilized by Zephyr

Partners and its Design Team for preliminary design of stormwater BMP's for the proposed mixed-used development.

1.4 Organization of This Report

The remainder of this report is organized as described below.

- Section 2 reviews the presently available project information.
- Section 3 describes the site geologic and subsurface conditions.
- Section 4 provides a planning phase evaluation of the site for implementation of stormwater infiltration BMP's.
- Section 5 provides discussion and recommendations regarding siting of stormwater BMP's.
- Section 6 provides a listing of references used in development of this report.

The report is supported by two appendices. Appendix A presents Worksheet C.4-1 (Form I-8), "Categorization of Infiltration Feasibility Condition". Appendix B presents records of the USDA soil survey.

2.0 PROJECT INFORMATION

2.1 Location

The subject site is located at the northwest corner of the intersection of Highway 101 and Dahlia Drive in the City of Solana Beach, San Diego County, California. Figure 2-1 presents the proposed area of the development.

Figure 2-1. Limits of the Planned Development

2.2 Proposed Development

The proposed development will be a mixed-use combination retail, office and residential structures. Current planning envisions two stories above ground of construction and two levels of underground parking.

Based on the review of available plans, the proposed structures are designed to be set back 10 feet from property lines.

2.3 Proposed Biofiltration Areas

2.3.1 General

NOVA's understanding of current planning for the stormwater BMP's is that provided in the BMP Concept Plan (Project Design Consultants, 2016).

Planning anticipates the use of several biofiltration areas. These areas are depicted on Figure 2-2 (following page).

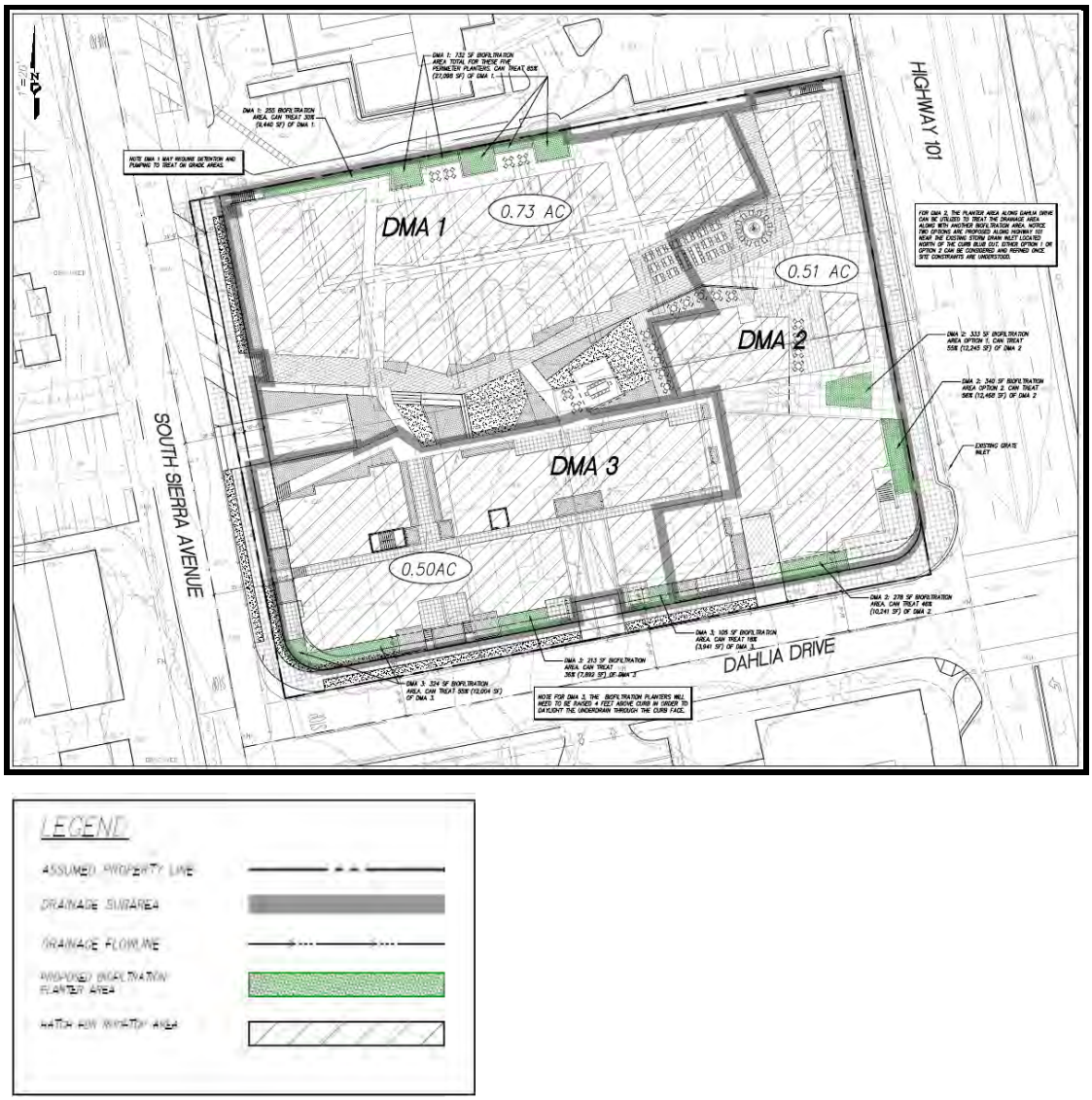

Figure 2-2. Locations of the Proposed Biofiltration Areas
(source: PDC 2016)

2.3.2 Reference Design Standard

Design for stormwater infiltration BMP's will be developed in conformance with *Design for stormwater infiltration BMPs will be developed in conformance with City of Solana Beach Design Manual (hereafter, 'Solana Beach 2016').*

3.0 SITE CONDITIONS

3.1 Surface

The subject site is currently partially developed, with single-story structures developed on the southern half of the property. Present site elevations range from approximately +61 to +67 feet above mean sea level, with a surface gradient facing west.

Figures 3-1 and 3-2 depict current surface conditions.

Figure 3-1. Surface Conditions, Looking Southwest from Highway 1

Figure 3-2. Surface Conditions, Looking East from S. Sierra Drive

3.2 Site Geology

The site was the object of a geotechnical investigation reported in May 2012 ('NOVA 2012'). Engineering borings associated with that work show that beneath a thin veneer of artificial fill, the site is underlain by the sandstones of a regionally continuous geologic unit known as the 'Old Paralic Formation Unit 6 (Qop6).' As encountered at this site, this geologic unit includes reddish brown weakly cemented sandstone. Qop6 extend to at least 50 feet below existing ground at this site.

3.3 Subsurface

Based on the review of the subsurface information developed for NOVA 2012 and for the purposes of this report, subsurface conditions may be generalized to occur as described below.

1. Unit 1, Fill. The site is covered by a veneer of artificial fill consisting of silty sands of loose to medium dense consistency. This unit extends to as much as 7 feet below ground surface where encountered. This material is planned to be removed as part of the grading operations.

2. Unit 2, Sandstone. The references indicate that underlying the artificial fill the site is underlain by Quaternary aged Old Paralic Deposits Unit 6 (Qop6) described as consisting of reddish brown weakly cemented friable sandstone. This unit extends to the depths explored by NOVA 2012; to at least about elevation +15 feet msl.

3.4 Groundwater

3.4.1 Site Specific

Groundwater was not encountered at the site during the time of the investigation by NOVA in April 2012. This finding indicates that at the time of drilling, groundwater did not occur above about elevation +15 feet msl. Review of other available references (GMU 2013 and Geotracker 2016) indicates a historic high groundwater of as high as +41 feet above mean sea level.

3.4.2 Nearby Sites

Public records of groundwater levels in the area (Geotracker, 2016) indicate that groundwater was encountered at depths ranging from 28 to 30 feet below grade at the property located at 101 Highway 101. This property is a former Unocal Station located at approximately 0.24 miles north of the subject site.

3.4.3 Recommended High Ground Water Level for This Site

Both the former Unocal Station and the subject site are located at similar elevations. Both sites are also located at similar distances from the ocean's upper tidal mark (approximately 750 feet from the former Unocal Station and 550 feet from the western property line of the subject site).

Based on this information historic groundwater at the subject site could be as high as elevation +41 feet msl.

4.0 SITE EVALUATION

4.1 Overview

The feasibility of stormwater infiltration is principally dependent on geotechnical and hydrogeologic conditions at the project site. This section provides NOVA's planning phase assessment of the feasibility of stormwater infiltration BMP's utilizing the information developed by this assessment.

The assessment presented in this section is intended to conform with the criteria for geotechnical and hydrogeologic assessment of infiltration feasibility provided in Appendix C of Solana Beach 2016.

4.2 Review of Geotechnical Feasibility Criteria

4.2.1 Overview

Section C.2 of Appendix C of San Diego 2016 provides seven factors should be considered by the project geotechnical professional while assessing the feasibility of infiltration related to geotechnical conditions. These factors are listed below

- C.2.1 Soil and Geologic Conditions
- C.2.2 Settlement and Volume Change
- C.2.3 Slope Stability
- C.2.4 Utility Considerations
- C.2.5 Groundwater Mounding
- C.2.6 Retaining Walls and Foundations
- C.2.7 Other Factors

The above geotechnical feasibility criteria are reviewed in the following subsections.

4.2.2 Soil and Geologic Conditions

<u>Site Specific Data</u>

As is discussed in Section 3, subsurface exploration associated with NOVA 2012 disclosed subsurface conditions that were characteristically sandy. NOVA expects that the design infiltration rates for the Unit 2 sandstones will be on the order of 1 inch/hour or greater.

<u>USDA Data</u>

The United States Department of Agriculture (USDA), Natural Resources Conservation Service, provides soil data and information for the entire United States. They include a description of the soils and miscellaneous areas and their location on the landscape and tables that show soil properties and limitations affecting various uses.

Soil units mapped by the USDA show that the subject site is underlain by soil unit MIC, Marina loamy coarse sand, 2 to 9 percent slopes, and is classified as hydrologic Soil Unit Group B, (Appendix B). Group B soils are described as:

> *Soils in this group have moderately low runoff potential when thoroughly wet. Water transmission through the soil is unimpeded. Group B soils typically have between 10 percent and 20 percent clay and 50 percent to 90 percent sand and have loamy sand or sandy loam textures. Some soils having loam, silt loam, silt, or sandy clay loam textures may be placed in this group if they are well aggregated, of low bulk density, or contain greater than 35 percent rock fragments.* (USDA, 2007).

4.2.3 Settlement and Volume Change.

Saturation of the certain soils can affect significant volume change, as described below.

1. Hydro-Collapse. Hydro-collapsible soils are common in the arid climates of the western United States in specific depositional environments (principally, in areas of young alluvial fans, debris flow sediments, and loess (wind-blown sediment)) deposits. While relatively strong in a dry state, the introduction of water to these soils causes the binding agents to fail. Destruction of the bonds/binding causes relatively rapid densification and volume loss (collapse), a change manifested by subsidence or settlement

2. Expansion. Clayey soils shrink and expand with changes in moisture content. Expansive clays are those that undergo considerable such volume change. Expansion and shrinkage by these soils can cause structural damage to rigid materials such as roads, foundations, pipes, and swimming pools. Expansive soils are common throughout California.

As is discussed in Section 3, the Unit 2 Paralic sandstones occur widely over San Diego County. By virtue of density and depositional history, the Paralic sandstones would not be expected to be hydro-collapsible. This expectation is confirmed by experience at hundreds of sites in the county. As such, hydro-collapse is not considered a risk for stormwater infiltration.

Similarly, the Unit 2 Paralic sandstones are not expansive. Though this unit locally includes some clays, the mineralogy of these clays does not lead to expansivity. As such, soil expansion is not considered a risk for stormwater infiltration.

4.2.4 Slope Stability

It is understood that slopes are not planned for the subject site. Stormwater infiltration BMP's will not create a risk of slope instability at the site.

4.2.5 Utility Impacts

As noted in the Storm Water Standards, BMP Design Manual, Infiltration near proposed utilities should be avoided.

Storm water infiltration has the potential to damage underground utilities and may pose a geotechnical hazard like saturation and water migration through the utility trenches. No full infiltration should be planned within 10 feet from underground utilities.

4.2.6 Groundwater Mounding

Poorly planned stormwater infiltration can result in ground water mounding during wet periods. Mounded water would be damaging to utilities, development infrastructure (pavements, flat work, etc.) and building foundations and retaining walls.

4.2.7 Retaining Walls and Foundations

The subject site is planned with two levels of underground parking with the corresponding retaining walls, having only 10 feet easement between the proposed walls and the property line.

If this planning is carried forward, stormwater infiltration BMP's would be sited with 10 feet of retaining walls and related foundations. Guidance in this regard is that stormwater infiltration BMP's be sited at least 10 feet away from retaining walls and foundations. Infiltration in close proximity to retaining walls and foundations can result in increases in lateral pressures to walls and reductions in the strength of soils supporting foundations.

4.2.8 Other Factors.

Other factors that may be affected by infiltration and cause geotechnical hazards at the site are discussed in the preceding section, current planning will locate structures at 10 feet from the property lines. This limits locations for stormwater infiltration BMP's to that narrow strip between the 10 foot setback and the property line. Sited as such, there is potential that infiltrated water will migrate laterally, encroaching on adjacent properties and the public right-of-way subjecting these buildings and improvements to the geotechnical hazards previously described.

It is the judgment of NOVA that current planning precludes infiltrating within this property line easement.

4.3 Review of Groundwater Quality and Water Balance Feasibility Criteria

4.3.1 General

Solana Beach 2016 includes eight factors related to groundwater and groundwater quality that should be considered when siting stormwater infiltration BMP's.

4.3.2 Soil and Groundwater Contamination

NOVA is not aware of any existing groundwater or soil contamination on this site or nearby sites that could be adversely affected by utilization of stormwater infiltration BMP's.

4.3.3 Separation the Seasonal High Groundwater

Solana Beach 2016 includes the guidance that the depth to seasonally high groundwater beneath the base of any infiltration BMP must be greater than 10 feet. As is discussed in Section 3, NOVA recommends that the high groundwater level of +41 feet msl be used for design of infiltration BMP's.

4.3.4 Wellhead Protection

In review of publicly available records, NOVA could find no natural or man-made wellheads within 100 feet of the subject site.

4.3.5 Contamination Risks from Land-Use Activities

The land-use proposed for this development will not generate abundant pollutants. As such, properly designed, operated and maintained infiltration BMP's will not threaten local groundwater quality.

4.3.6 Consultation with Applicable Groundwater Agencies

Because the planning level nature of this assessment, groundwater resource protection agencies have not been contacted. NOVA has reviewed publicly available groundwater information for the site area.

4.3.7 Water Balance Impacts on Streamflow

There are no nearby surface water resources that can be affected by stormwater infiltration at the subject site.

4.3.8 Downstream Water Rights

NOVA has not considered this factor, though the absence of surface water in the site vicinity suggests this factors not a concern.

5.0 DISCUSSION AND RECOMMENDATIONS

5.1 Discussion

5.1.1 Preliminary Site Evaluation

Based upon the indications of the field exploration reported in NOVA 2012, as well as review of publicly available information NOVA has evaluated site as abstracted below.

- There are no areas of contaminated soil or contaminated groundwater known to be within the site or within 500 feet down gradient of the site.
- There are no 'brownfield' sites within 1,000 feet of the site.
- There are no slopes steeper than 25% within the site limits.
- There are no known water supply wells, septic systems, USTs, or permitted graywater systems within 500 feet of locations contemplated for stormwater infiltration BMP's
- Soil types are well understood. The site is largely underlain by the sequence of soils and rock listed below.
    - Unit 1, Fill. A sandy fill covers the site, extending to depths of about 7 feet in thickness. The estimated mean permeability (k_m) of this unit will be on the order of $k_m \sim 10^{-4}$ cm/second. It is expected that design infiltration rates for this unit will exceed 1.5 inches/hr.
    - Unit 2, Sandstone. Quaternary aged Old Paralic Deposits Unit 6 (Qop6) underlie the fill. This unit is described as consisting of reddish brown weakly cemented friable sandstone. This unit extends to the depths explored by NOVA 2012; to at least about elevation +15 feet msl. It is expected that design infiltration rates for this unit will be on the order of 1 inch/hour or greater.

The Unit 1 sand and Unit 2 sandstone should be suitable for infiltration without significant risk of mounding and related damage to utilities, pavements, and moisture-sensitive foundation soils.

5.1.2 Site Constraints

As is discussed in Section 4, it is NOVA's judgment that current planning for the siting of stormwater infiltration BMP's infeasible based on the following conditions:

- The currently planned sites for stormwater infiltration BMP's sets these structures to within 10 feet of proposed retaining walls and foundations. This near proximity can lead to excessive lateral pressures on walls.
- The currently planned sites for stormwater infiltration BMP's sets these structures near the property lines, with related concerns for off-site migration of stormwater.

5.1.3 Categorization of Infiltration Feasibility Conditions.

The Categorization of Infiltration Feasibility Condition, Worksheet C.4-1, is presented in Appendix A.

5.2 Recommendations

If the current planning is to be maintained, NOVA recommends utilization of lined, no-infiltration storm water management BMP's at the current prospective sites.

6.0 REFERENCES

1. Geotracker 2016. California State Water Resources Control Board, Geotracker, found at *http://geotracker.waterboards.ca.gov/*.

2. NOVA 2012. *Geotechnical Investigation Solana 101 Mixed Used Project, highway 101 and Dahlia Drive Solana Beach California.* NOVA Services, Inc. Project 2012015, May 31, 2012.

3. PDC 2016. *BMP Concept Plan*, Project Design Consultants, Project No. 4242.00, June 29, 2016.

4. Solana Beach 2016. *Model BMP Design Manual, San Diego Region, for Permanent Site Design, Storm Water Treatment and Hydromodification Management,* January 2016, adopted by the City of Solana Beach.

5. Steele 2016. *Solana 101, Street Elevations,* M.W. Steele Group, Inc.,Project No. 1606, August 03, 2016.

6. USDA 2007, *National Engineering Handbook, Chapter 7, Hydrologic Soils Groups.* United States Department of Agriculture, Natural Resources Conservation Service, May 2007.

7. USDA 2013. *Web Soil Survey,* United States Department of Agriculture (USDA), Natural Resources Conservation Service, 2013, found at *http://websoilsurvey.sc.egov.usda.gov/*.

8. USGS 2014. *San Diego Hydrogeology,* United States Geological Survey, found at: *http://ca.water.usgs.gov/sandiego/*

APPENDIX A

CATEGORIZATION OF INFILTRATION FEASIBILITY CONDITION, WORKSHEET C.4-1

Worksheet C.4-1: Categorization of Infiltration Feasibility Condition

Categorization of Infiltration Feasibility Condition		Worksheet C.4-1	
Part 1 - Full Infiltration Feasibility Screening Criteria Would infiltration of the full design volume be feasible from a physical perspective without any undesirable consequences that cannot be reasonably mitigated?			
Criteria	Screening Question	Yes	No
1	Is the estimated reliable infiltration rate below proposed facility locations greater than 0.5 inches per hour? The response to this Screening Question shall be based on a comprehensive evaluation of the factors presented in Appendix C.2 and Appendix D.	X	
Provide basis: *Although for this planning phase preliminary assessment, NOVA did not perform an infiltration test as the site, based on the information obtained, the USDA classify the existing soils as hydrologic Soil Unit Group B. The geotechnical report for the site indicates that the soils consist of a loose to medium dense, sand to silty sand, these soils typically have infiltration rates that may range around 0.5 inches per hour.* Summarize findings of studies; provide reference to studies, calculations, maps, data sources, etc. Provide narrative discussion of study/data source applicability.			
2	Can infiltration greater than 0.5 inches per hour be allowed without increasing risk of geotechnical hazards (slope stability, groundwater mounding, utilities, or other factors) that cannot be mitigated to an acceptable level? The response to this Screening Question shall be based on a comprehensive evaluation of the factors presented in Appendix C.2.		X
Provide basis: *1. The proposed structures are planned to have two stories of underground parking, and planned to be constructed at 10 feet from the property lines in all sides, this condition will place the infiltration basins too close (within 10 feet) to the proposed underground parking retaining walls and foundations, potentially impacting lateral pressures and reduction of soil strength.* *2. Also the infiltration basins would have to be constructed too close to the property lines, with the potential of infiltrated water to migrate laterally and potentially encroaching into the adjacent property, properties downgradient and into the public right of way, potentially affecting negatively buildings and improvements in the adjacent properties and public right of way* *3. Saturation of the underlying damp, loose to medium dense soils by water infiltration can create geotechnically hazardous conditions including: settlement, consolidation, hydrocollapse, and potential for liquefaction that may affect the proposed structures and neighboring structures due to the potential of infiltrated water to migrate laterally.* Summarize findings of studies; provide reference to studies, calculations, maps, data sources, etc. Provide narrative discussion of study/data source applicability.			

Worksheet C.4-1 Page 2 of 4			
Criteria	Screening Question	Yes	No
3	Can infiltration greater than 0.5 inches per hour be allowed without increasing risk of groundwater contamination (shallow water table, storm water pollutants or other factors) that cannot be mitigated to an acceptable level? The response to this Screening Question shall be based on a comprehensive evaluation of the factors presented in Appendix C.3.		
Provide basis: *Water contamination was not evaluated at this time, although our research indicate a historic high groundwater of +41 feet above mean sea level. The subject site is located in an area where the existing elevations and proposed elevations range from +61 and +67 feet above means sea level, which places the historic groundwater at approximate depths of 20 and 26 feet below existing elevations.* Summarize findings of studies; provide reference to studies, calculations, maps, data sources, etc. Provide narrative discussion of study/data source applicability.			
4	Can infiltration greater than 0.5 inches per hour be allowed without causing potential water balance issues such as change of seasonality of ephemeral streams or increased discharge of contaminated groundwater to surface waters? The response to this Screening Question shall be based on a comprehensive evaluation of the factors presented in Appendix C.3.		
Provide basis: *The potential for water balance was not evaluated by NOVA Services.* Summarize findings of studies; provide reference to studies, calculations, maps, data sources, etc. Provide narrative discussion of study/data source applicability.			
Part 1 Result*	If all answers to rows 1 - 4 are "Yes" a full infiltration design is potentially feasible. The feasibility screening category is Full Infiltration If any answer from row 1-4 is "No", infiltration may be possible to some extent but would not generally be feasible or desirable to achieve a "full infiltration" design. Proceed to Part 2		

*To be completed using gathered site information and best professional judgment considering the definition of MEP in the MS4 Permit. Additional testing and/or studies may be required by City Engineer to substantiate findings.

Worksheet C.4-1 Page 3 of 4			
Part 2 – Partial Infiltration vs. No Infiltration Feasibility Screening Criteria Would infiltration of water in any appreciable amount be physically feasible without any negative consequences that cannot be reasonably mitigated?			
Criteria	Screening Question	Yes	No
5	Do soil and geologic conditions allow for infiltration in any appreciable rate or volume? The response to this Screening Question shall be based on a comprehensive evaluation of the factors presented in Appendix C.2 and Appendix D.	X	
Provide basis: *Although for this planning phase preliminary assessment, NOVA did not perform an infiltration test as the site, based on the information obtained, the USDA classify the existing soils as hydrologic Soil Unit Group B. The geotechnical report for the site indicates that the soils consist of a loose to medium dense, sand to silty sand, these soils typically have infiltration rates that may range around 0.5 inches per hour.* Summarize findings of studies; provide reference to studies, calculations, maps, data sources, etc. Provide narrative discussion of study/data source applicability and why it was not feasible to mitigate low infiltration rates.			
6	Can Infiltration in any appreciable quantity be allowed without increasing risk of geotechnical hazards (slope stability, groundwater mounding, utilities, or other factors) that cannot be mitigated to an acceptable level? The response to this Screening Question shall be based on a comprehensive evaluation of the factors presented in Appendix C.2.		X
Provide basis: *Review of the available references and plans for the site indicate that the potential areas for infiltration less than the recommended distance to property lines and retaining walls. As such, an infiltration rate cannot be allowed.* Summarize findings of studies; provide reference to studies, calculations, maps, data sources, etc. Provide narrative discussion of study/data source applicability and why it was not feasible to mitigate low infiltration rates.			

Worksheet C.4-1 Page 4 of 4			
Criteria	Screening Question	Yes	No
7	Can Infiltration in any appreciable quantity be allowed without posing significant risk for groundwater related concerns (shallow water table, storm water pollutants or other factors)? The response to this Screening Question shall be based on a comprehensive evaluation of the factors presented in Appendix C.3.		
Provide basis: *Water contamination was not evaluated at this time, as noted previously our research indicate a historic high groundwater of +41 feet above mean sea level. The subject site is located in an area where the existing elevations and proposed elevations range from +61 and +67 feet above means sea level, which places the historic groundwater at approximate depths of 20 and 26 feet below existing elevations.* Summarize findings of studies; provide reference to studies, calculations, maps, data sources, etc. Provide narrative discussion of study/data source applicability and why it was not feasible to mitigate low infiltration rates.			
8	Can infiltration be allowed without violating downstream water rights? The response to this Screening Question shall be based on a comprehensive evaluation of the factors presented in Appendix C.3.		
Provide basis: *Violation of downstream water rights , was not evaluated by NOVA* Summarize findings of studies; provide reference to studies, calculations, maps, data sources, etc. Provide narrative discussion of study/data source applicability and why it was not feasible to mitigate low infiltration rates.			
Part 2 Result*	If all answers from row 1-4 are yes then partial infiltration design is potentially feasible. The feasibility screening category is Partial Infiltration. If any answer from row 5-8 is no, then infiltration of any volume is considered to be infeasible within the drainage area. The feasibility screening category is No Infiltration.		

*To be completed using gathered site information and best professional judgment considering the definition of MEP in the MS4 Permit. Additional testing and/or studies may be required by City Engineer to substantiate findings

C.5. Feasibility Screening Exhibits

Table C.5-1 lists the feasibility screening exhibits that were generated using readily available GIS data sets to assist the project applicant to screen the project site for feasibility.

Table C.5-1: Feasibility Screening Exhibits

Figures	Layer	Intent/Rationale	Data Sources
C.1 Soils	Hydrologic Soil Group – A, B, C, D	Hydrologic Soil Group will aid in determining areas of potential infiltration	NRCS Web Soil Survey http://websoilsurvey.sc.egov.usda.gov/
	Hydric Soils	Hydric soils will indicate layers of intermittent saturation that may function like a D soil and should be avoided for infiltration	USDA Web Soil Survey. Hydric soils, (ratings of 100) were classified as hydric. http://websoilsurvey.sc.egov.usda.gov/App/HomePage.htm
C.2: Slopes and Geologic Hazards	Slopes >25%	BMPs are hard to construct on slopes >25% and can potentially cause slope instability	SanGIS http://www.sangis.org/
	Liquefaction Potential	BMPs (particularly infiltration BMPs) must not be sited in areas with high potential for liquefaction or landslides to minimize earthquake/landslide risks	SanGIS http://www.sangis.org/
	Landslide Potential		SanGIS Geologic Hazards layer. Subset of polygons with hazard codes related to landslides was selected. This data is limited to the City of San Diego Boundary. http://www.sangis.org/
C.3: Groundwater Table Elevations	Groundwater Depths	Infiltration BMPs will need to be sited in areas with adequate distance (>10 ft) from the groundwater table	GeoTracker. Data downloaded for San Diego county from 2014 and 2013. In cases where there were multiple measurements made at the same well, the average was taken over that year. http://geotracker.waterboards.ca.gov/data_download_by_county.asp
C.4: Contaminated Sites	Contaminated soils and/or groundwater sites	Infiltration must limited in areas of contaminated soil/groundwater	GeoTracker. Data downloaded for San Diego county and limited to active cleanup sites http://geotracker.waterboards.ca.gov/

APPENDIX B

WEB SOIL SURVEY

United States Department of Agriculture

Natural Resources Conservation Service

A product of the National Cooperative Soil Survey, a joint effort of the United States Department of Agriculture and other Federal agencies, State agencies including the Agricultural Experiment Stations, and local participants

Custom Soil Resource Report for San Diego County Area, California

September 19, 2016

Preface

Soil surveys contain information that affects land use planning in survey areas. They highlight soil limitations that affect various land uses and provide information about the properties of the soils in the survey areas. Soil surveys are designed for many different users, including farmers, ranchers, foresters, agronomists, urban planners, community officials, engineers, developers, builders, and home buyers. Also, conservationists, teachers, students, and specialists in recreation, waste disposal, and pollution control can use the surveys to help them understand, protect, or enhance the environment.

Various land use regulations of Federal, State, and local governments may impose special restrictions on land use or land treatment. Soil surveys identify soil properties that are used in making various land use or land treatment decisions. The information is intended to help the land users identify and reduce the effects of soil limitations on various land uses. The landowner or user is responsible for identifying and complying with existing laws and regulations.

Although soil survey information can be used for general farm, local, and wider area planning, onsite investigation is needed to supplement this information in some cases. Examples include soil quality assessments (http://www.nrcs.usda.gov/wps/portal/nrcs/main/soils/health/) and certain conservation and engineering applications. For more detailed information, contact your local USDA Service Center (http://offices.sc.egov.usda.gov/locator/app?agency=nrcs) or your NRCS State Soil Scientist (http://www.nrcs.usda.gov/wps/portal/nrcs/detail/soils/contactus/?cid=nrcs142p2_053951).

Great differences in soil properties can occur within short distances. Some soils are seasonally wet or subject to flooding. Some are too unstable to be used as a foundation for buildings or roads. Clayey or wet soils are poorly suited to use as septic tank absorption fields. A high water table makes a soil poorly suited to basements or underground installations.

The National Cooperative Soil Survey is a joint effort of the United States Department of Agriculture and other Federal agencies, State agencies including the Agricultural Experiment Stations, and local agencies. The Natural Resources Conservation Service (NRCS) has leadership for the Federal part of the National Cooperative Soil Survey.

Information about soils is updated periodically. Updated information is available through the NRCS Web Soil Survey, the site for official soil survey information.

The U.S. Department of Agriculture (USDA) prohibits discrimination in all its programs and activities on the basis of race, color, national origin, age, disability, and where applicable, sex, marital status, familial status, parental status, religion, sexual orientation, genetic information, political beliefs, reprisal, or because all or a part of an individual's income is derived from any public assistance program. (Not all prohibited bases apply to all programs.) Persons with disabilities who require alternative means

for communication of program information (Braille, large print, audiotape, etc.) should contact USDA's TARGET Center at (202) 720-2600 (voice and TDD). To file a complaint of discrimination, write to USDA, Director, Office of Civil Rights, 1400 Independence Avenue, S.W., Washington, D.C. 20250-9410 or call (800) 795-3272 (voice) or (202) 720-6382 (TDD). USDA is an equal opportunity provider and employer.

Contents

Preface.....2
How Soil Surveys Are Made.....5
Soil Map.....7
Soil Map.....8
Legend.....9
Map Unit Legend.....10
Map Unit Descriptions.....10
San Diego County Area, California.....12
MIC—Marina loamy coarse sand, 2 to 9 percent slopes.....12
References.....14

How Soil Surveys Are Made

Soil surveys are made to provide information about the soils and miscellaneous areas in a specific area. They include a description of the soils and miscellaneous areas and their location on the landscape and tables that show soil properties and limitations affecting various uses. Soil scientists observed the steepness, length, and shape of the slopes; the general pattern of drainage; the kinds of crops and native plants; and the kinds of bedrock. They observed and described many soil profiles. A soil profile is the sequence of natural layers, or horizons, in a soil. The profile extends from the surface down into the unconsolidated material in which the soil formed or from the surface down to bedrock. The unconsolidated material is devoid of roots and other living organisms and has not been changed by other biological activity.

Currently, soils are mapped according to the boundaries of major land resource areas (MLRAs). MLRAs are geographically associated land resource units that share common characteristics related to physiography, geology, climate, water resources, soils, biological resources, and land uses (USDA, 2006). Soil survey areas typically consist of parts of one or more MLRA.

The soils and miscellaneous areas in a survey area occur in an orderly pattern that is related to the geology, landforms, relief, climate, and natural vegetation of the area. Each kind of soil and miscellaneous area is associated with a particular kind of landform or with a segment of the landform. By observing the soils and miscellaneous areas in the survey area and relating their position to specific segments of the landform, a soil scientist develops a concept, or model, of how they were formed. Thus, during mapping, this model enables the soil scientist to predict with a considerable degree of accuracy the kind of soil or miscellaneous area at a specific location on the landscape.

Commonly, individual soils on the landscape merge into one another as their characteristics gradually change. To construct an accurate soil map, however, soil scientists must determine the boundaries between the soils. They can observe only a limited number of soil profiles. Nevertheless, these observations, supplemented by an understanding of the soil-vegetation-landscape relationship, are sufficient to verify predictions of the kinds of soil in an area and to determine the boundaries.

Soil scientists recorded the characteristics of the soil profiles that they studied. They noted soil color, texture, size and shape of soil aggregates, kind and amount of rock fragments, distribution of plant roots, reaction, and other features that enable them to identify soils. After describing the soils in the survey area and determining their properties, the soil scientists assigned the soils to taxonomic classes (units). Taxonomic classes are concepts. Each taxonomic class has a set of soil characteristics with precisely defined limits. The classes are used as a basis for comparison to classify soils systematically. Soil taxonomy, the system of taxonomic classification used in the United States, is based mainly on the kind and character of soil properties and the arrangement of horizons within the profile. After the soil scientists classified and named the soils in the survey area, they compared the

individual soils with similar soils in the same taxonomic class in other areas so that they could confirm data and assemble additional data based on experience and research.

The objective of soil mapping is not to delineate pure map unit components; the objective is to separate the landscape into landforms or landform segments that have similar use and management requirements. Each map unit is defined by a unique combination of soil components and/or miscellaneous areas in predictable proportions. Some components may be highly contrasting to the other components of the map unit. The presence of minor components in a map unit in no way diminishes the usefulness or accuracy of the data. The delineation of such landforms and landform segments on the map provides sufficient information for the development of resource plans. If intensive use of small areas is planned, onsite investigation is needed to define and locate the soils and miscellaneous areas.

Soil scientists make many field observations in the process of producing a soil map. The frequency of observation is dependent upon several factors, including scale of mapping, intensity of mapping, design of map units, complexity of the landscape, and experience of the soil scientist. Observations are made to test and refine the soil-landscape model and predictions and to verify the classification of the soils at specific locations. Once the soil-landscape model is refined, a significantly smaller number of measurements of individual soil properties are made and recorded. These measurements may include field measurements, such as those for color, depth to bedrock, and texture, and laboratory measurements, such as those for content of sand, silt, clay, salt, and other components. Properties of each soil typically vary from one point to another across the landscape.

Observations for map unit components are aggregated to develop ranges of characteristics for the components. The aggregated values are presented. Direct measurements do not exist for every property presented for every map unit component. Values for some properties are estimated from combinations of other properties.

While a soil survey is in progress, samples of some of the soils in the area generally are collected for laboratory analyses and for engineering tests. Soil scientists interpret the data from these analyses and tests as well as the field-observed characteristics and the soil properties to determine the expected behavior of the soils under different uses. Interpretations for all of the soils are field tested through observation of the soils in different uses and under different levels of management. Some interpretations are modified to fit local conditions, and some new interpretations are developed to meet local needs. Data are assembled from other sources, such as research information, production records, and field experience of specialists. For example, data on crop yields under defined levels of management are assembled from farm records and from field or plot experiments on the same kinds of soil.

Predictions about soil behavior are based not only on soil properties but also on such variables as climate and biological activity. Soil conditions are predictable over long periods of time, but they are not predictable from year to year. For example, soil scientists can predict with a fairly high degree of accuracy that a given soil will have a high water table within certain depths in most years, but they cannot predict that a high water table will always be at a specific level in the soil on a specific date.

After soil scientists located and identified the significant natural bodies of soil in the survey area, they drew the boundaries of these bodies on aerial photographs and identified each as a specific map unit. Aerial photographs show trees, buildings, fields, roads, and rivers, all of which help in locating boundaries accurately.

Soil Map

The soil map section includes the soil map for the defined area of interest, a list of soil map units on the map and extent of each map unit, and cartographic symbols displayed on the map. Also presented are various metadata about data used to produce the map, and a description of each soil map unit.

Custom Soil Resource Report
Soil Map

MAP LEGEND

Area of Interest (AOI)

Area of Interest (AOI)

Soils

Soil Map Unit Polygons

Soil Map Unit Lines

Soil Map Unit Points

Special Point Features

Blowout

Borrow Pit

Clay Spot

Closed Depression

Gravel Pit

Gravelly Spot

Landfill

Lava Flow

Marsh or swamp

Mine or Quarry

Miscellaneous Water

Perennial Water

Rock Outcrop

Saline Spot

Sandy Spot

Severely Eroded Spot

Sinkhole

Slide or Slip

Sodic Spot

Spoil Area

Stony Spot

Very Stony Spot

Wet Spot

Other

Special Line Features

Water Features

Streams and Canals

Transportation

Rails

Interstate Highways

US Routes

Major Roads

Local Roads

Background

Aerial Photography

MAP INFORMATION

The soil surveys that comprise your AOI were mapped at 1:24,000.

Warning: Soil Map may not be valid at this scale.

Enlargement of maps beyond the scale of mapping can cause misunderstanding of the detail of mapping and accuracy of soil line placement. The maps do not show the small areas of contrasting soils that could have been shown at a more detailed scale.

Please rely on the bar scale on each map sheet for map measurements.

Source of Map: Natural Resources Conservation Service
Web Soil Survey URL: http://websoilsurvey.nrcs.usda.gov
Coordinate System: Web Mercator (EPSG:3857)

Maps from the Web Soil Survey are based on the Web Mercator projection, which preserves direction and shape but distorts distance and area. A projection that preserves area, such as the Albers equal-area conic projection, should be used if more accurate calculations of distance or area are required.

This product is generated from the USDA-NRCS certified data as of the version date(s) listed below.

Soil Survey Area: San Diego County Area, California
Survey Area Data: Version 9, Sep 17, 2015

Soil map units are labeled (as space allows) for map scales 1:50,000 or larger.

Date(s) aerial images were photographed: Nov 3, 2014—Nov 22, 2014

The orthophoto or other base map on which the soil lines were compiled and digitized probably differs from the background imagery displayed on these maps. As a result, some minor shifting of map unit boundaries may be evident.

Map Unit Legend

San Diego County Area, California (CA638)			
Map Unit Symbol	**Map Unit Name**	**Acres in AOI**	**Percent of AOI**
MIC	Marina loamy coarse sand, 2 to 9 percent slopes	1.9	100.0%
Totals for Area of Interest		**1.9**	**100.0%**

Map Unit Descriptions

The map units delineated on the detailed soil maps in a soil survey represent the soils or miscellaneous areas in the survey area. The map unit descriptions, along with the maps, can be used to determine the composition and properties of a unit.

A map unit delineation on a soil map represents an area dominated by one or more major kinds of soil or miscellaneous areas. A map unit is identified and named according to the taxonomic classification of the dominant soils. Within a taxonomic class there are precisely defined limits for the properties of the soils. On the landscape, however, the soils are natural phenomena, and they have the characteristic variability of all natural phenomena. Thus, the range of some observed properties may extend beyond the limits defined for a taxonomic class. Areas of soils of a single taxonomic class rarely, if ever, can be mapped without including areas of other taxonomic classes. Consequently, every map unit is made up of the soils or miscellaneous areas for which it is named and some minor components that belong to taxonomic classes other than those of the major soils.

Most minor soils have properties similar to those of the dominant soil or soils in the map unit, and thus they do not affect use and management. These are called noncontrasting, or similar, components. They may or may not be mentioned in a particular map unit description. Other minor components, however, have properties and behavioral characteristics divergent enough to affect use or to require different management. These are called contrasting, or dissimilar, components. They generally are in small areas and could not be mapped separately because of the scale used. Some small areas of strongly contrasting soils or miscellaneous areas are identified by a special symbol on the maps. If included in the database for a given area, the contrasting minor components are identified in the map unit descriptions along with some characteristics of each. A few areas of minor components may not have been observed, and consequently they are not mentioned in the descriptions, especially where the pattern was so complex that it was impractical to make enough observations to identify all the soils and miscellaneous areas on the landscape.

The presence of minor components in a map unit in no way diminishes the usefulness or accuracy of the data. The objective of mapping is not to delineate pure taxonomic classes but rather to separate the landscape into landforms or landform segments that have similar use and management requirements. The delineation of such segments on the map provides sufficient information for the development of resource plans. If intensive use of small areas is planned, however, onsite investigation is needed to define and locate the soils and miscellaneous areas.

An identifying symbol precedes the map unit name in the map unit descriptions. Each description includes general facts about the unit and gives important soil properties and qualities.

Soils that have profiles that are almost alike make up a *soil series*. Except for differences in texture of the surface layer, all the soils of a series have major horizons that are similar in composition, thickness, and arrangement.

Soils of one series can differ in texture of the surface layer, slope, stoniness, salinity, degree of erosion, and other characteristics that affect their use. On the basis of such differences, a soil series is divided into *soil phases*. Most of the areas shown on the detailed soil maps are phases of soil series. The name of a soil phase commonly indicates a feature that affects use or management. For example, Alpha silt loam, 0 to 2 percent slopes, is a phase of the Alpha series.

Some map units are made up of two or more major soils or miscellaneous areas. These map units are complexes, associations, or undifferentiated groups.

A *complex* consists of two or more soils or miscellaneous areas in such an intricate pattern or in such small areas that they cannot be shown separately on the maps. The pattern and proportion of the soils or miscellaneous areas are somewhat similar in all areas. Alpha-Beta complex, 0 to 6 percent slopes, is an example.

An *association* is made up of two or more geographically associated soils or miscellaneous areas that are shown as one unit on the maps. Because of present or anticipated uses of the map units in the survey area, it was not considered practical or necessary to map the soils or miscellaneous areas separately. The pattern and relative proportion of the soils or miscellaneous areas are somewhat similar. Alpha-Beta association, 0 to 2 percent slopes, is an example.

An *undifferentiated group* is made up of two or more soils or miscellaneous areas that could be mapped individually but are mapped as one unit because similar interpretations can be made for use and management. The pattern and proportion of the soils or miscellaneous areas in a mapped area are not uniform. An area can be made up of only one of the major soils or miscellaneous areas, or it can be made up of all of them. Alpha and Beta soils, 0 to 2 percent slopes, is an example.

Some surveys include *miscellaneous areas*. Such areas have little or no soil material and support little or no vegetation. Rock outcrop is an example.

San Diego County Area, California

MIC—Marina loamy coarse sand, 2 to 9 percent slopes

Map Unit Setting

National map unit symbol: hbdz
Mean annual air temperature: 57 to 61 degrees F
Farmland classification: Prime farmland if irrigated

Map Unit Composition

Marina and similar soils: 85 percent
Minor components: 15 percent
Estimates are based on observations, descriptions, and transects of the mapunit.

Description of Marina

Setting

Landform: Ridges
Down-slope shape: Linear
Across-slope shape: Linear
Parent material: Eolian sands derived from mixed sources

Typical profile

H1 - 0 to 10 inches: loamy coarse sand
H2 - 10 to 57 inches: loamy sand, loamy coarse sand
H2 - 10 to 57 inches: sand, coarse sand
H3 - 57 to 60 inches:
H3 - 57 to 60 inches:

Properties and qualities

Slope: 2 to 9 percent
Depth to restrictive feature: More than 80 inches
Natural drainage class: Somewhat excessively drained
Runoff class: Medium
Capacity of the most limiting layer to transmit water (Ksat): Moderately high to high (0.57 to 1.98 in/hr)
Depth to water table: More than 80 inches
Frequency of flooding: None
Frequency of ponding: None
Salinity, maximum in profile: Nonsaline to very slightly saline (0.0 to 2.0 mmhos/cm)
Available water storage in profile: Moderate (about 8.7 inches)

Interpretive groups

Land capability classification (irrigated): 3s
Land capability classification (nonirrigated): 4e
Hydrologic Soil Group: B
Hydric soil rating: No

Minor Components

Carlsbad

Percent of map unit: 5 percent
Hydric soil rating: No

Chesterton

Percent of map unit: 5 percent

Hydric soil rating: No

Corralitos

Percent of map unit: 5 percent
Hydric soil rating: No

References

American Association of State Highway and Transportation Officials (AASHTO). 2004. Standard specifications for transportation materials and methods of sampling and testing. 24th edition.

American Society for Testing and Materials (ASTM). 2005. Standard classification of soils for engineering purposes. ASTM Standard D2487-00.

Cowardin, L.M., V. Carter, F.C. Golet, and E.T. LaRoe. 1979. Classification of wetlands and deep-water habitats of the United States. U.S. Fish and Wildlife Service FWS/OBS-79/31.

Federal Register. July 13, 1994. Changes in hydric soils of the United States.

Federal Register. September 18, 2002. Hydric soils of the United States.

Hurt, G.W., and L.M. Vasilas, editors. Version 6.0, 2006. Field indicators of hydric soils in the United States.

National Research Council. 1995. Wetlands: Characteristics and boundaries.

Soil Survey Division Staff. 1993. Soil survey manual. Soil Conservation Service. U.S. Department of Agriculture Handbook 18. http://www.nrcs.usda.gov/wps/portal/nrcs/detail/national/soils/?cid=nrcs142p2_054262

Soil Survey Staff. 1999. Soil taxonomy: A basic system of soil classification for making and interpreting soil surveys. 2nd edition. Natural Resources Conservation Service, U.S. Department of Agriculture Handbook 436. http://www.nrcs.usda.gov/wps/portal/nrcs/detail/national/soils/?cid=nrcs142p2_053577

Soil Survey Staff. 2010. Keys to soil taxonomy. 11th edition. U.S. Department of Agriculture, Natural Resources Conservation Service. http://www.nrcs.usda.gov/wps/portal/nrcs/detail/national/soils/?cid=nrcs142p2_053580

Tiner, R.W., Jr. 1985. Wetlands of Delaware. U.S. Fish and Wildlife Service and Delaware Department of Natural Resources and Environmental Control, Wetlands Section.

United States Army Corps of Engineers, Environmental Laboratory. 1987. Corps of Engineers wetlands delineation manual. Waterways Experiment Station Technical Report Y-87-1.

United States Department of Agriculture, Natural Resources Conservation Service. National forestry manual. http://www.nrcs.usda.gov/wps/portal/nrcs/detail/soils/home/?cid=nrcs142p2_053374

United States Department of Agriculture, Natural Resources Conservation Service. National range and pasture handbook. http://www.nrcs.usda.gov/wps/portal/nrcs/detail/national/landuse/rangepasture/?cid=stelprdb1043084

United States Department of Agriculture, Natural Resources Conservation Service. National soil survey handbook, title 430-VI. http://www.nrcs.usda.gov/wps/portal/nrcs/detail/soils/scientists/?cid=nrcs142p2_054242

United States Department of Agriculture, Natural Resources Conservation Service. 2006. Land resource regions and major land resource areas of the United States, the Caribbean, and the Pacific Basin. U.S. Department of Agriculture Handbook 296. http://www.nrcs.usda.gov/wps/portal/nrcs/detail/national/soils/?cid=nrcs142p2_053624

United States Department of Agriculture, Soil Conservation Service. 1961. Land capability classification. U.S. Department of Agriculture Handbook 210. http://www.nrcs.usda.gov/Internet/FSE_DOCUMENTS/nrcs142p2_052290.pdf

ATTACHMENT 1e
BMP Worksheets/Calculations

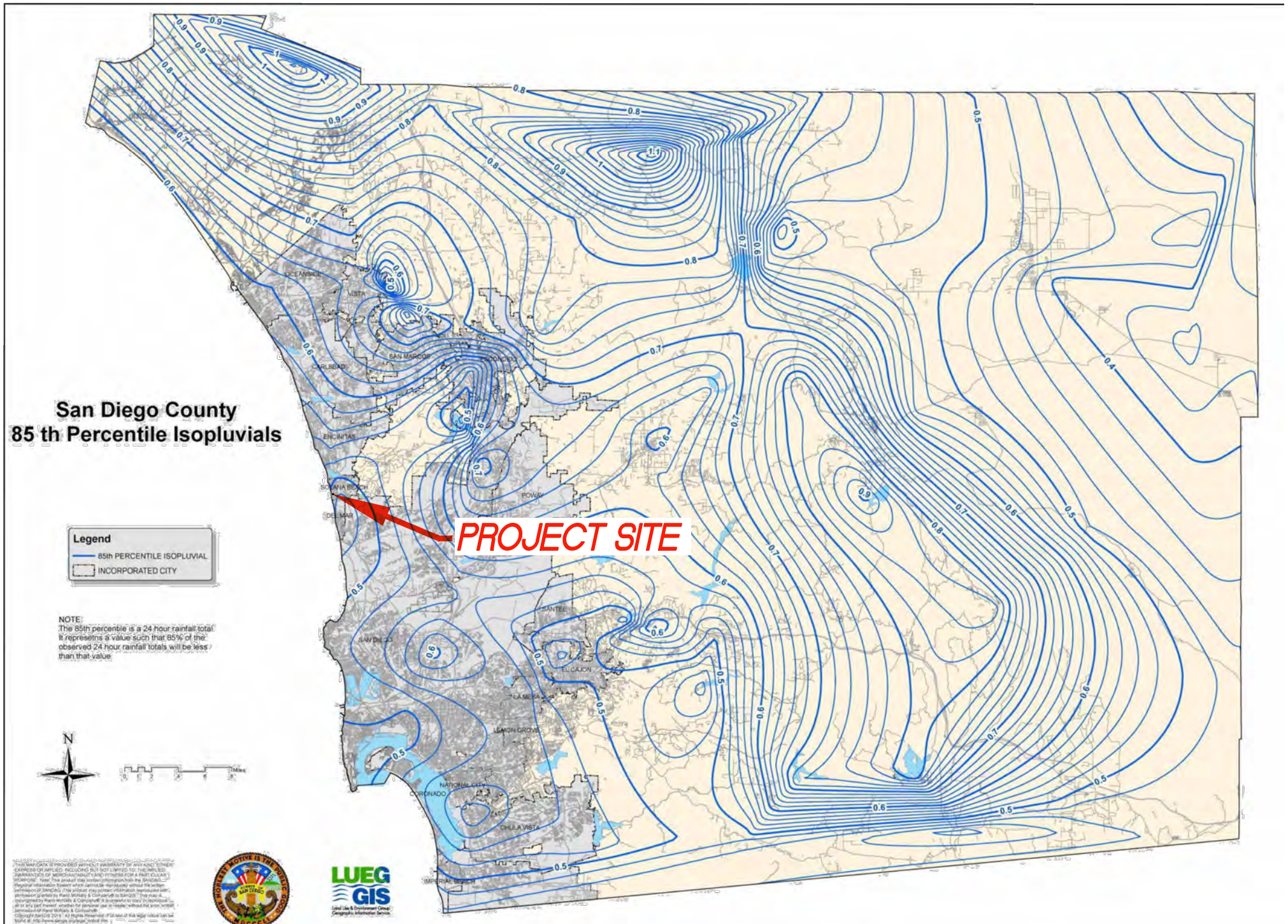
San Diego County
85 th Percentile Isopluvials
Legend
85th PERCENTILE ISOPLUVIAL
INCORPORATED CITY
NOTE:
The 85th percentile is a 24 hour rainfall total. It represetns a value such that 85% of the observed 24 hour rainfall totals will be less than that value
PROJECT SITE
OCEANSIDE
VISTA
CARLSBAD
SAN MARCOS
ESCONDIDO
ENCINITAS
SOLANA BEACH
DEL MAR
POWAY
SANTEE
SAN DIEGO
EL CAJON
LA MESA
LEMON GROVE
NATIONAL CITY
CORONADO
CHULA VISTA
IMPERIAL BEACH
N
Miles
LUEG GIS

ATTACHMENT 1B: Worksheet B.2-1: DCV

85th percentile 24-hr storm depth from Figure B.1.= 0.49

DMA ID	BIOFILTRATION BMP ID (BF #)	BMP Drainage Area (ac)	Impervious Area (ac)	Amended Soils (ac) (C=0.1)	% Impervious	Composite C[1]	Design Capture Volume (DCV) (CF)
1	BF #1	0.08	0.08	0.00	96%	0.87	124
2	BF #2	0.25	0.24	0.01	95%	0.86	384
3	BF #3	0.07	0.06	0.01	88%	0.80	100
4	BF #4	0.10	0.10	0.00	96%	0.87	155
5	BF #5	0.06	0.06	0.00	94%	0.85	91
6	BF #6	0.45	0.41	0.04	92%	0.84	669
7	BF #7	0.70	0.67	0.03	96%	0.87	1080

Notes:

1) Equation for composite C factor = (0.9*Impervious Area +0.1*Pervious Area)/Total Area per BMP Design Manual.

C factors are from Table B.1-1 of Feb 2016 City BMP Design Manual.

Worksheet B.5-1: Simple Sizing Method for Biofiltration BMPs

BMP: Biofiltration Area #1

	Simple Sizing Method for Biofiltration BMPs	**Worksheet B-5.1**	
1	Remaining DCV after implementing retention BMPs	124	cubic-feet
Partial Retention			
2	Infiltration rate from Worksheet D.5-1 if partial infiltration is feasible	0.00	in/hr
3	Allowable drawdown time for aggregate storage below the underdrain	36	hours
4	Depth of runoff that can be infiltrated [Line 2 x Line 3]	0	inches
5	Aggregate pore space	0.4	in/in
6	Required depth of gravel below the underdrain [Line 4/ Line 5]	0	inches
7	Assumed surface area of the biofiltration BMP	**56**	sq-ft
8	Media retained pore space	0.1	in/in
9	Volume retained by BMP [[Line 4 + (Line 12 x Line 8)]/12] x Line 7	18.2	cubic-feet
10	DCV that requires biofiltration [Line 1 – Line 9]	105.4	cubic-feet
BMP Parameters			
11	Surface Ponding [6 inch minimum, 12 inch maximum]	6	inches
12	Media Thickness [18 inches minimum], also add mulch layer thickness to this line for sizing calculations	39	inches
13	Aggregate Storage above underdrain invert (12 inches typical) – use 0 inches for sizing of the aggregate is not over the entire bottom surface area	15	inches
14	Freely drained pore space	0.2	in/in
15	Media filtration rate to be used for sizing (5 in/hr. with no outlet control; if the filtration rate is controlled by the outlet use the outlet controlled rate which will be less than 5 in/hr.)	5	in/hr
Baseline Calculations			
16	Allowable Routing Time for sizing	6	hours
17	Depth filtered during storm [Line 15 x Line 16]	30	inches
18	Depth of Detention Storage [Line 11 + (Line 12 x Line 14) + (Line 13 x Line 5)]	19.8	inches
19	Total Depth Treated [Line 17 + Line 18]	49.8	inches
Option 1 – Biofilter 1.5 times the DCV			
20	Required biofiltered volume [1.5 x Line 10]	158.1	cubic-feet
21	Required Footprint [Line 20/ Line 19] x 12	**38.1**	sq-ft
Option 2 - Store 0.75 of remaining DCV in pores and ponding			
22	Required Storage (surface + pores) Volume [0.75 x Line 10]	79.0	cubic-feet
23	Required Footprint [Line 22/ Line 18] x 12	**47.9**	sq-ft
Footprint of the BMP			
24	Area draining to the BMP	3484.8	sq-ft
25	Adjusted Runoff Factor for drainage area (Refer to Appendix B.1 and B.2)	0.87	
26	BMP Footprint Sizing Factor (Default 0.03 or an alternative minimum footprint sizing factor from Worksheet B.5-2, Line 11)	0.003	
27	Minimum BMP Footprint (Line 24 x Line 25 x minimum sizing factor)	8	sq-ft
28	Footprint of the BMP = Maximum(Minimum(Line 21, Line 23), Line 27)	**38**	sq-ft
Check for Volume Reduction [Not applicable for No Infiltration Condition]			
29	Calculate the fraction of DCV retained in the BMP [Line 9/Line 1]	**0.147**	unitless
30	Minimum required fraction of DCV retained for partial infiltration	**0.150**	unitless
31	Is the retained DCV ≥ 0.325? If the answer is no increase the footprint sizing factor in Line 26 until the answer is yes for this criterion.	**N/A**	unitless
	Check Footprint Provided >= Footprint Required	**OK**	

Notes:

1. Line 7 is used to estimate the amount of volume retained by the BMP. Update assumed surface area in Line 7 until its
2. The DCV fraction of 0.325 is based on a 40% average annual percent capture and a 36-hour drawdown time.

3. The increase in footprint for volume reduction can be optimized using the approach presented in Appendix B.5.2. The optimized footprint cannot be smaller than the alternative minimum footprint sizing factor from Worksheet B.5-2.

4. If the proposed biofiltration BMP footprint is smaller than the alternative minimum footprint sizing factor from Worksheet B.5-2, but satisfies Option 1 or Option 2 sizing, it is considered a compact biofiltration BMP and may be allowed at the discretion of the City Engineer, if it meets the requirements in Appendix F.

Worksheet B.5-2: Calculation of Alternative Minimum Footprint Sizing Factor BMP: Biofiltration #1

Alternative Minimum Footprint Sizing Factor		Worksheet B.5-2 (Page 1 of 2)		
1	Area draining to the BMP		3484.80	sq-ft
2	Adjusted Runoff Factor for drainage area (Refer to Appendix B.1 and B.2)		0.87	
3	Load to Clog (See Table B.5-3 for guidance; Lc)		2	lb/sq-ft
4	Allowable Period to Accumulate Clogging Load (T_L)		10	years
Volume Weighted EMC Calculation				
Land Use		**Fraction of Total DCV**	**TSS EMC (mg/L)**	**Product**
Single Family Residential			123	0
Commercial			128	0
Industrial			125	0
Education (Municipal)			132	0
Transportation			78	0
Multi-family Residential			40	0
Roof Runoff		1.00	14	14
Low Traffic Areas			50	0
Open Space			216	0
Other, specify:				0
Other, specify:				0
Other, specify:				0
5	Volume Weighted EMC (sum of all products)		14	mg/L
BMP Parameters				
6	If pretreatment measures are included in the design, apply an adjustment of 25% 1 [Line 5 x (1-0.25)]		11	mg/L
7	Average Annual Precipitation		10	inches/yr
8	Calculate the Average Annual Runoff (Line 7 x Line 1 X (Line 1/12) x Line2		2522	cu-ft/yr
9	Calculate the Average Annual TSS Load (Line 8 x 62.4 x Line 6)/10^6		2	lb/yr
10	Calculate the BMP Footprint Needed (Line 9 x Line 4)/Line 3		8	sq-ft
11	Calculate the Alternative Minimum Footprint Sizing Factor [Line 10/ (Line 1 x Line 2)]		0.003	

Worksheet B.5-1: Simple Sizing Method for Biofiltration BMPs

BMP: Biofiltration Area #2

	Simple Sizing Method for Biofiltration BMPs	**Worksheet B-5.1**	
1	Remaining DCV after implementing retention BMPs	383.5	cubic-feet
Partial Retention			
2	Infiltration rate from Worksheet D.5-1 if partial infiltration is feasible	0.00	in/hr
3	Allowable drawdown time for aggregate storage below the underdrain	36	hours
4	Depth of runoff that can be infiltrated [Line 2 x Line 3]	0	inches
5	Aggregate pore space	0.4	in/in
6	Required depth of gravel below the underdrain [Line 4/ Line 5]	0	inches
7	Assumed surface area of the biofiltration BMP	**137**	sq-ft
8	Media retained pore space	0.1	in/in
9	Volume retained by BMP [[Line 4 + (Line 12 x Line 8)]/12] x Line 7	44.5	cubic-feet
10	DCV that requires biofiltration [Line 1 – Line 9]	339.0	cubic-feet
BMP Parameters			
11	Surface Ponding [6 inch minimum, 12 inch maximum]	6	inches
12	Media Thickness [18 inches minimum], also add mulch layer thickness to this line for sizing calculations	39	inches
13	Aggregate Storage above underdrain invert (12 inches typical) – use 0 inches for sizing of the aggregate is not over the entire bottom surface area	15	inches
14	Freely drained pore space	0.2	in/in
15	Media filtration rate to be used for sizing (5 in/hr. with no outlet control; if the filtration rate is controlled by the outlet use the outlet controlled rate which will be less than 5 in/hr.)	5	in/hr
Baseline Calculations			
16	Allowable Routing Time for sizing	6	hours
17	Depth filtered during storm [Line 15 x Line 16]	30	inches
18	Depth of Detention Storage [Line 11 + (Line 12 x Line 14) + (Line 13 x Line 5)]	19.8	inches
19	Total Depth Treated [Line 17 + Line 18]	49.8	inches
Option 1 – Biofilter 1.5 times the DCV			
20	Required biofiltered volume [1.5 x Line 10]	508.5	cubic-feet
21	Required Footprint [Line 20/ Line 19] x 12	**122.5**	sq-ft
Option 2 - Store 0.75 of remaining DCV in pores and ponding			
22	Required Storage (surface + pores) Volume [0.75 x Line 10]	254.3	cubic-feet
23	Required Footprint [Line 22/ Line 18] x 12	**154.1**	sq-ft
Footprint of the BMP			
24	Area draining to the BMP	10890	sq-ft
25	Adjusted Runoff Factor for drainage area (Refer to Appendix B.1 and B.2)	0.86	
26	BMP Footprint Sizing Factor (Default 0.03 or an alternative minimum footprint sizing factor from Worksheet B.5-2, Line 11)	0.008	
27	Minimum BMP Footprint (Line 24 x Line 25 x minimum sizing factor)	73	sq-ft
28	Footprint of the BMP = Maximum(Minimum(Line 21, Line 23), Line 27)	**123**	sq-ft
Check for Volume Reduction [Not applicable for No Infiltration Condition]			
29	Calculate the fraction of DCV retained in the BMP [Line 9/Line 1]	**0.116**	unitless
30	Minimum required fraction of DCV retained for partial infiltration	**0.150**	unitless
31	Is the retained DCV ≥ 0.325? If the answer is no increase the footprint sizing factor in Line 26 until the answer is yes for this criterion.	**N/A**	unitless
	Check Footprint Provided >= Footprint Required	**OK**	

Notes:

1. Line 7 is used to estimate the amount of volume retained by the BMP. Update assumed surface area in Line 7 until its

2. The DCV fraction of 0.325 is based on a 40% average annual percent capture and a 36-hour drawdown time.

3. The increase in footprint for volume reduction can be optimized using the approach presented in Appendix B.5.2. The optimized footprint cannot be smaller than the alternative minimum footprint sizing factor from Worksheet B.5-2.

4. If the proposed biofiltration BMP footprint is smaller than the alternative minimum footprint sizing factor from Worksheet B.5-2, but satisfies Option 1 or Option 2 sizing, it is considered a compact biofiltration BMP and may be allowed at the discretion of the City Engineer, if it meets the requirements in Appendix F.

Worksheet B.5-2: Calculation of Alternative Minimum Footprint Sizing Factor BMP: Biofiltration #2

Alternative Minimum Footprint Sizing Factor		Worksheet B.5-2 (Page 1 of 2)		
1	Area draining to the BMP		10890.0	sq-ft
2	Adjusted Runoff Factor for drainage area (Refer to Appendix B.1 and B.2)		0.86	
3	Load to Clog (See Table B.5-3 for guidance; Lc)		2	lb/sq-ft
4	Allowable Period to Accumulate Clogging Load (T_L)		10	years
Volume Weighted EMC Calculation				
Land Use		**Fraction of Total DCV**	**TSS EMC (mg/L)**	**Product**
Single Family Residential			123	0
Commercial			128	0
Industrial			125	0
Education (Municipal)			132	0
Transportation			78	0
Multi-family Residential		1.00	40	40
Roof Runoff			14	0
Low Traffic Areas			50	0
Open Space			216	0
Other, specify:				0
Other, specify:				0
Other, specify:				0
5	Volume Weighted EMC (sum of all products)		40	mg/L
BMP Parameters				
6	If pretreatment measures are included in the design, apply an adjustment of 25% 1 [Line 5 x (1-0.25)]		30	mg/L
7	Average Annual Precipitation		10	inches/yr
8	Calculate the Average Annual Runoff (Line 7 x (Line 1/12) x Line2		7827	cu-ft/yr
9	Calculate the Average Annual TSS Load (Line 8 x 62.4 x Line 6)/10^6		15	lb/yr
10	Calculate the BMP Footprint Needed (Line 9 x Line 4)/Line 3		73	sq-ft
11	Calculate the Alternative Minimum Footprint Sizing Factor [Line 10/ (Line 1 x Line 2)]		0.008	

Worksheet B.5-1: Simple Sizing Method for Biofiltration BMPs

BMP: Biofiltration Area #3

	Simple Sizing Method for Biofiltration BMPs	**Worksheet B-5.1**	
1	Remaining DCV after implementing retention BMPs	99.7	cubic-feet
Partial Retention			
2	Infiltration rate from Worksheet D.5-1 if partial infiltration is feasible	0.00	in/hr
3	Allowable drawdown time for aggregate storage below the underdrain	36	hours
4	Depth of runoff that can be infiltrated [Line 2 x Line 3]	0	inches
5	Aggregate pore space	0.4	in/in
6	Required depth of gravel below the underdrain [Line 4/ Line 5]	0	inches
7	Assumed surface area of the biofiltration BMP	**129**	sq-ft
8	Media retained pore space	0.1	in/in
9	Volume retained by BMP [[Line 4 + (Line 12 x Line 8)]/12] x Line 7	19.4	cubic-feet
10	DCV that requires biofiltration [Line 1 – Line 9]	80.3	cubic-feet
BMP Parameters			
11	Surface Ponding [6 inch minimum, 12 inch maximum]	6	inches
12	Media Thickness [18 inches minimum], also add mulch layer thickness to this line for sizing calculations	18	inches
13	Aggregate Storage above underdrain invert (12 inches typical) – use 0 inches for sizing of the aggregate is not over the entire bottom surface area	12	inches
14	Freely drained pore space	0.2	in/in
15	Media filtration rate to be used for sizing (5 in/hr. with no outlet control; if the filtration rate is controlled by the outlet use the outlet controlled rate which will be less than 5 in/hr.)	5	in/hr
Baseline Calculations			
16	Allowable Routing Time for sizing	6	hours
17	Depth filtered during storm [Line 15 x Line 16]	30	inches
18	Depth of Detention Storage [Line 11 + (Line 12 x Line 14) + (Line 13 x Line 5)]	14.4	inches
19	Total Depth Treated [Line 17 + Line 18]	44.4	inches
Option 1 – Biofilter 1.5 times the DCV			
20	Required biofiltered volume [1.5 x Line 10]	120.5	cubic-feet
21	Required Footprint [Line 20/ Line 19] x 12	**32.6**	sq-ft
Option 2 - Store 0.75 of remaining DCV in pores and ponding			
22	Required Storage (surface + pores) Volume [0.75 x Line 10]	60.2	cubic-feet
23	Required Footprint [Line 22/ Line 18] x 12	**50.2**	sq-ft
Footprint of the BMP			
24	Area draining to the BMP	3049.2	sq-ft
25	Adjusted Runoff Factor for drainage area (Refer to Appendix B.1 and B.2)	0.86	
26	BMP Footprint Sizing Factor (Default 0.03 or an alternative minimum footprint sizing factor from Worksheet B.5-2, Line 11)	0.008	
27	Minimum BMP Footprint (Line 24 x Line 25 x minimum sizing factor)	21	sq-ft
28	Footprint of the BMP = Maximum(Minimum(Line 21, Line 23), Line 27)	**33**	sq-ft
Check for Volume Reduction [Not applicable for No Infiltration Condition]			
29	Calculate the fraction of DCV retained in the BMP [Line 9/Line 1]	**0.194**	unitless
30	Minimum required fraction of DCV retained for partial infiltration	**0.150**	unitless
31	Is the retained DCV ≥ 0.325? If the answer is no increase the footprint sizing factor in Line 26 until the answer is yes for this criterion.	**N/A**	unitless
	Check Footprint Provided >= Footprint Required	**OK**	

Notes:

1. Line 7 is used to estimate the amount of volume retained by the BMP. Update assumed surface area in Line 7 until its

2. The DCV fraction of 0.325 is based on a 40% average annual percent capture and a 36-hour drawdown time.

3. The increase in footprint for volume reduction can be optimized using the approach presented in Appendix B.5.2. The optimized footprint cannot be smaller than the alternative minimum footprint sizing factor from Worksheet B.5-2.

4. If the proposed biofiltration BMP footprint is smaller than the alternative minimum footprint sizing factor from Worksheet B.5-2, but satisfies Option 1 or Option 2 sizing, it is considered a compact biofiltration BMP and may be allowed at the discretion of the City Engineer, if it meets the requirements in Appendix F.

Worksheet B.5-2: Calculation of Alternative Minimum Footprint Sizing Factor BMP: Biofiltration #3

Alternative Minimum Footprint Sizing Factor		Worksheet B.5-2 (Page 1 of 2)		
1	Area draining to the BMP		3049.2	sq-ft
2	Adjusted Runoff Factor for drainage area (Refer to Appendix B.1 and B.2)		0.80	
3	Load to Clog (See Table B.5-3 for guidance; Lc)		2	lb/sq-ft
4	Allowable Period to Accumulate Clogging Load (T_L)		10	years
Volume Weighted EMC Calculation				
Land Use		**Fraction of Total DCV**	**TSS EMC (mg/L)**	**Product**
Single Family Residential			123	0
Commercial			128	0
Industrial			125	0
Education (Municipal)			132	0
Transportation			78	0
Multi-family Residential		0.15	40	6
Roof Runoff		0.85	14	12
Low Traffic Areas			50	0
Open Space			216	0
Other, specify:				0
Other, specify:				0
Other, specify:				0
5	Volume Weighted EMC (sum of all products)		18	mg/L
BMP Parameters				
6	If pretreatment measures are included in the design, apply an adjustment of 25% 1 [Line 5 x (1-0.25)]		13	mg/L
7	Average Annual Precipitation		10	inches/yr
8	Calculate the Average Annual Runoff (Line 7 x (Line 1 /12) x Line2		2034	cu-ft/yr
9	Calculate the Average Annual TSS Load (Line 8 x 62.4 x Line 6)/10^6		2	lb/yr
10	Calculate the BMP Footprint Needed (Line 9 x Line 4)/Line 3		9	sq-ft
11	Calculate the Alternative Minimum Footprint Sizing Factor [Line 10/ (Line 1 x Line 2)]		0.003	

Worksheet B.5-1: Simple Sizing Method for Biofiltration BMPs

BMP: Biofiltration Area #4

	Simple Sizing Method for Biofiltration BMPs	**Worksheet B-5.1**	
1	Remaining DCV after implementing retention BMPs	154.6	cubic-feet
Partial Retention			
2	Infiltration rate from Worksheet D.5-1 if partial infiltration is feasible	0.00	in/hr
3	Allowable drawdown time for aggregate storage below the underdrain	36	hours
4	Depth of runoff that can be infiltrated [Line 2 x Line 3]	0	inches
5	Aggregate pore space	0.4	in/in
6	Required depth of gravel below the underdrain [Line 4/ Line 5]	0	inches
7	Assumed surface area of the biofiltration BMP	**168**	sq-ft
8	Media retained pore space	0.1	in/in
9	Volume retained by BMP [[Line 4 + (Line 12 x Line 8)]/12] x Line 7	25.2	cubic-feet
10	DCV that requires biofiltration [Line 1 – Line 9]	129.4	cubic-feet
BMP Parameters			
11	Surface Ponding [6 inch minimum, 12 inch maximum]	6	inches
12	Media Thickness [18 inches minimum], also add mulch layer thickness to this line for sizing calculations	18	inches
13	Aggregate Storage above underdrain invert (12 inches typical) – use 0 inches for sizing of the aggregate is not over the entire bottom surface area	12	inches
14	Freely drained pore space	0.2	in/in
15	Media filtration rate to be used for sizing (5 in/hr. with no outlet control; if the filtration rate is controlled by the outlet use the outlet controlled rate which will be less than 5 in/hr.)	5	in/hr
Baseline Calculations			
16	Allowable Routing Time for sizing	6	hours
17	Depth filtered during storm [Line 15 x Line 16]	30	inches
18	Depth of Detention Storage [Line 11 + (Line 12 x Line 14) + (Line 13 x Line 5)]	14.4	inches
19	Total Depth Treated [Line 17 + Line 18]	44.4	inches
Option 1 – Biofilter 1.5 times the DCV			
20	Required biofiltered volume [1.5 x Line 10]	194.1	cubic-feet
21	Required Footprint [Line 20/ Line 19] x 12	**52.5**	sq-ft
Option 2 - Store 0.75 of remaining DCV in pores and ponding			
22	Required Storage (surface + pores) Volume [0.75 x Line 10]	97.0	cubic-feet
23	Required Footprint [Line 22/ Line 18] x 12	**80.9**	sq-ft
Footprint of the BMP			
24	Area draining to the BMP	4356	sq-ft
25	Adjusted Runoff Factor for drainage area (Refer to Appendix B.1 and B.2)	0.80	
26	BMP Footprint Sizing Factor (Default 0.03 or an alternative minimum footprint sizing factor from Worksheet B.5-2, Line 11)	0.003	
27	Minimum BMP Footprint (Line 24 x Line 25 x minimum sizing factor)	10	sq-ft
28	Footprint of the BMP = Maximum(Minimum(Line 21, Line 23), Line 27)	**52**	sq-ft
Check for Volume Reduction [Not applicable for No Infiltration Condition]			
29	Calculate the fraction of DCV retained in the BMP [Line 9/Line 1]	**0.163**	unitless
30	Minimum required fraction of DCV retained for partial infiltration	**0.150**	unitless
31	Is the retained DCV ≥ 0.325? If the answer is no increase the footprint sizing factor in Line 26 until the answer is yes for this criterion.	**YES**	unitless
	Check Footprint Provided >= Footprint Required	**OK**	

Notes:

1. Line 7 is used to estimate the amount of volume retained by the BMP. Update assumed surface area in Line 7 until its
2. The DCV fraction of 0.325 is based on a 40% average annual percent capture and a 36-hour drawdown time.
3. The increase in footprint for volume reduction can be optimized using the approach presented in Appendix B.5.2. The
4. If the proposed biofiltration BMP footprint is smaller than the alternative minimum footprint sizing factor from Worksheet B.5-2, but satisfies Option 1 or Option 2 sizing, it is considered a compact biofiltration BMP and may be allowed at the discretion of the City Engineer, if it meets the requirements in Appendix F.

Worksheet B.5-2: Calculation of Alternative Minimum Footprint Sizing Factor BMP: Biofiltration #4

Alternative Minimum Footprint Sizing Factor		Worksheet B.5-2 (Page 1 of 2)		
1	Area draining to the BMP		4356.00	sq-ft
2	Adjusted Runoff Factor for drainage area (Refer to Appendix B.1 and B.2)		0.87	
3	Load to Clog (See Table B.5-3 for guidance; Lc)		2	lb/sq-ft
4	Allowable Period to Accumulate Clogging Load (T_L)		10	years
Volume Weighted EMC Calculation				
Land Use		**Fraction of Total DCV**	**TSS EMC (mg/L)**	**Product**
Single Family Residential			123	0
Commercial			128	0
Industrial			125	0
Education (Municipal)			132	0
Transportation			78	0
Multi-family Residential			40	0
Roof Runoff		1.00	14	14
Low Traffic Areas			50	0
Open Space			216	0
Other, specify:				0
Other, specify:				0
Other, specify:				0
5	Volume Weighted EMC (sum of all products)		14	mg/L
BMP Parameters				
6	If pretreatment measures are included in the design, apply an adjustment of 25% 1 [Line 5 x (1-0.25)]		11	mg/L
7	Average Annual Precipitation		10	inches/yr
8	Calculate the Average Annual Runoff (Line 7 x(Line 1/12) x Line2		3155	cu-ft/yr
9	Calculate the Average Annual TSS Load (Line 8 x 62.4 x Line 6)/10^6		2	lb/yr
10	Calculate the BMP Footprint Needed (Line 9 x Line 4)/Line 3		10	sq-ft
11	Calculate the Alternative Minimum Footprint Sizing Factor [Line 10/ (Line 1 x Line 2)]		0.003	

Worksheet B.5-1: Simple Sizing Method for Biofiltration BMPs

BMP: Biofiltration Area #5

	Simple Sizing Method for Biofiltration BMPs	**Worksheet B-5.1**	
1	Remaining DCV after implementing retention BMPs	90.9	cubic-feet
Partial Retention			
2	Infiltration rate from Worksheet D.5-1 if partial infiltration is feasible	0.00	in/hr
3	Allowable drawdown time for aggregate storage below the underdrain	36	hours
4	Depth of runoff that can be infiltrated [Line 2 x Line 3]	0	inches
5	Aggregate pore space	0.4	in/in
6	Required depth of gravel below the underdrain [Line 4/ Line 5]	0	inches
7	Assumed surface area of the biofiltration BMP	**158**	sq-ft
8	Media retained pore space	0.1	in/in
9	Volume retained by BMP [[Line 4 + (Line 12 x Line 8)]/12] x Line 7	23.7	cubic-feet
10	DCV that requires biofiltration [Line 1 – Line 9]	67.2	cubic-feet
BMP Parameters			
11	Surface Ponding [6 inch minimum, 12 inch maximum]	6	inches
12	Media Thickness [18 inches minimum], also add mulch layer thickness to this line for sizing calculations	18	inches
13	Aggregate Storage above underdrain invert (12 inches typical) – use 0 inches for sizing of the aggregate is not over the entire bottom surface area	12	inches
14	Freely drained pore space	0.2	in/in
15	Media filtration rate to be used for sizing (5 in/hr. with no outlet control; if the filtration rate is controlled by the outlet use the outlet controlled rate which will be less than 5 in/hr.)	5	in/hr
Baseline Calculations			
16	Allowable Routing Time for sizing	6	hours
17	Depth filtered during storm [Line 15 x Line 16]	30	inches
18	Depth of Detention Storage [Line 11 + (Line 12 x Line 14) + (Line 13 x Line 5)]	14.4	inches
19	Total Depth Treated [Line 17 + Line 18]	44.4	inches
Option 1 – Biofilter 1.5 times the DCV			
20	Required biofiltered volume [1.5 x Line 10]	100.8	cubic-feet
21	Required Footprint [Line 20/ Line 19] x 12	**27.2**	sq-ft
Option 2 - Store 0.75 of remaining DCV in pores and ponding			
22	Required Storage (surface + pores) Volume [0.75 x Line 10]	50.4	cubic-feet
23	Required Footprint [Line 22/ Line 18] x 12	**42.0**	sq-ft
Footprint of the BMP			
24	Area draining to the BMP	2613.6	sq-ft
25	Adjusted Runoff Factor for drainage area (Refer to Appendix B.1 and B.2)	0.87	
26	BMP Footprint Sizing Factor (Default 0.03 or an alternative minimum footprint sizing factor from Worksheet B.5-2, Line 11)	0.008	
27	Minimum BMP Footprint (Line 24 x Line 25 x minimum sizing factor)	18	sq-ft
28	Footprint of the BMP = Maximum(Minimum(Line 21, Line 23), Line 27)	**27**	sq-ft
Check for Volume Reduction [Not applicable for No Infiltration Condition]			
29	Calculate the fraction of DCV retained in the BMP [Line 9/Line 1]	**0.261**	unitless
30	Minimum required fraction of DCV retained for partial infiltration	**0.150**	unitless
31	Is the retained DCV ≥ 0.325? If the answer is no increase the footprint sizing factor in Line 26 until the answer is yes for this criterion.	**YES**	unitless
	Check Footprint Provided >= Footprint Required	**OK**	

Notes:

1. Line 7 is used to estimate the amount of volume retained by the BMP. Update assumed surface area in Line 7 until its
2. The DCV fraction of 0.325 is based on a 40% average annual percent capture and a 36-hour drawdown time.

3. The increase in footprint for volume reduction can be optimized using the approach presented in Appendix B.5.2. The optimized footprint cannot be smaller than the alternative minimum footprint sizing factor from Worksheet B.5-2.

4. If the proposed biofiltration BMP footprint is smaller than the alternative minimum footprint sizing factor from Worksheet B.5-2, but satisfies Option 1 or Option 2 sizing, it is considered a compact biofiltration BMP and may be allowed at the discretion of the City Engineer, if it meets the requirements in Appendix F.

Worksheet B.5-2: Calculation of Alternative Minimum Footprint Sizing Factor BMP: Biofiltration #5

Alternative Minimum Footprint Sizing Factor		Worksheet B.5-2 (Page 1 of 2)		
1	Area draining to the BMP		2613.60	acre
2	Adjusted Runoff Factor for drainage area (Refer to Appendix B.1 and B.2)		0.85	
3	Load to Clog (See Table B.5-3 for guidance; Lc)		2	lb/sq-ft
4	Allowable Period to Accumulate Clogging Load (T_L)		10	years
Volume Weighted EMC Calculation				
Land Use		**Fraction of Total DCV**	**TSS EMC (mg/L)**	**Product**
Single Family Residential			123	0
Commercial			128	0
Industrial			125	0
Education (Municipal)			132	0
Transportation			78	0
Multi-family Residential		1.00	40	40
Roof Runoff			14	0
Low Traffic Areas			50	0
Open Space			216	0
Other, specify:				0
Other, specify:				0
Other, specify:				0
5	Volume Weighted EMC (sum of all products)		40	mg/L
BMP Parameters				
6	If pretreatment measures are included in the design, apply an adjustment of 25% 1 [Line 5 x (1-0.25)]		30	mg/L
7	Average Annual Precipitation		10	inches/yr
8	Calculate the Average Annual Runoff (Line 7 x (Line 1 /12) x Line2		1855	cu-ft/yr
9	Calculate the Average Annual TSS Load (Line 8 x 62.4 x Line 6)/10^6		3	lb/yr
10	Calculate the BMP Footprint Needed (Line 9 x Line 4)/Line 3		17	sq-ft
11	Calculate the Alternative Minimum Footprint Sizing Factor [Line 10/ (Line 1 x Line 2)]		0.008	

Worksheet B.5-1: Simple Sizing Method for Biofiltration BMPs

BMP: Biofiltration Area #6

	Simple Sizing Method for Biofiltration BMPs	**Worksheet B-5.1**	
1	Remaining DCV after implementing retention BMPs	669.4	cubic-feet
Partial Retention			
2	Infiltration rate from Worksheet D.5-1 if partial infiltration is feasible	0.00	in/hr
3	Allowable drawdown time for aggregate storage below the underdrain	36	hours
4	Depth of runoff that can be infiltrated [Line 2 x Line 3]	0	inches
5	Aggregate pore space	0.4	in/in
6	Required depth of gravel below the underdrain [Line 4/ Line 5]	0	inches
7	Assumed surface area of the biofiltration BMP	**280**	sq-ft
8	Media retained pore space	0.1	in/in
9	Volume retained by BMP [[Line 4 + (Line 12 x Line 8)]/12] x Line 7	42.0	cubic-feet
10	DCV that requires biofiltration [Line 1 – Line 9]	627.4	cubic-feet
BMP Parameters			
11	Surface Ponding [6 inch minimum, 12 inch maximum]	6	inches
12	Media Thickness [18 inches minimum], also add mulch layer thickness to this line for sizing calculations	18	inches
13	Aggregate Storage above underdrain invert (12 inches typical) – use 0 inches for sizing of the aggregate is not over the entire bottom surface area	12	inches
14	Freely drained pore space	0.2	in/in
15	Media filtration rate to be used for sizing (5 in/hr. with no outlet control; if the filtration rate is controlled by the outlet use the outlet controlled rate which will be less than 5 in/hr.)	5	in/hr
Baseline Calculations			
16	Allowable Routing Time for sizing	6	hours
17	Depth filtered during storm [Line 15 x Line 16]	30	inches
18	Depth of Detention Storage [Line 11 + (Line 12 x Line 14) + (Line 13 x Line 5)]	14.4	inches
19	Total Depth Treated [Line 17 + Line 18]	44.4	inches
Option 1 – Biofilter 1.5 times the DCV			
20	Required biofiltered volume [1.5 x Line 10]	941.1	cubic-feet
21	Required Footprint [Line 20/ Line 19] x 12	**254.3**	sq-ft
Option 2 - Store 0.75 of remaining DCV in pores and ponding			
22	Required Storage (surface + pores) Volume [0.75 x Line 10]	470.5	cubic-feet
23	Required Footprint [Line 22/ Line 18] x 12	**392.1**	sq-ft
Footprint of the BMP			
24	Area draining to the BMP	19602	sq-ft
25	Adjusted Runoff Factor for drainage area (Refer to Appendix B.1 and B.2)	0.85	
26	BMP Footprint Sizing Factor (Default 0.03 or an alternative minimum footprint sizing factor from Worksheet B.5-2, Line 11)	0.008	
27	Minimum BMP Footprint (Line 24 x Line 25 x minimum sizing factor)	130	sq-ft
28	Footprint of the BMP = Maximum(Minimum(Line 21, Line 23), Line 27)	**254**	sq-ft
Check for Volume Reduction [Not applicable for No Infiltration Condition]			
29	Calculate the fraction of DCV retained in the BMP [Line 9/Line 1]	**0.063**	unitless
30	Minimum required fraction of DCV retained for partial infiltration	**0.150**	unitless
31	Is the retained DCV ≥ 0.325? If the answer is no increase the footprint sizing factor in Line 26 until the answer is yes for this criterion.	**N/A**	unitless
	Check Footprint Provided >= Footprint Required	**OK**	

Notes:

1. Line 7 is used to estimate the amount of volume retained by the BMP. Update assumed surface area in Line 7 until its
2. The DCV fraction of 0.325 is based on a 40% average annual percent capture and a 36-hour drawdown time.

3. The increase in footprint for volume reduction can be optimized using the approach presented in Appendix B.5.2. The optimized footprint cannot be smaller than the alternative minimum footprint sizing factor from Worksheet B.5-2.

4. If the proposed biofiltration BMP footprint is smaller than the alternative minimum footprint sizing factor from Worksheet B.5-2, but satisfies Option 1 or Option 2 sizing, it is considered a compact biofiltration BMP and may be allowed at the discretion of the City Engineer, if it meets the requirements in Appendix F.

Worksheet B.5-2: Calculation of Alternative Minimum Footprint Sizing Factor BMP: Biofiltration #6

Alternative Minimum Footprint Sizing Factor		Worksheet B.5-2 (Page 1 of 2)		
1	Area draining to the BMP		19602.00	sq-ft
2	Adjusted Runoff Factor for drainage area (Refer to Appendix B.1 and B.2)		0.84	
3	Load to Clog (See Table B.5-3 for guidance; Lc)		2	lb/sq-ft
4	Allowable Period to Accumulate Clogging Load (T_L)		10	years
Volume Weighted EMC Calculation				
Land Use		**Fraction of Total DCV**	**TSS EMC (mg/L)**	**Product**
Single Family Residential			123	0
Commercial			128	0
Industrial			125	0
Education (Municipal)			132	0
Transportation			78	0
Multi-family Residential		1.00	40	40
Roof Runoff			14	0
Low Traffic Areas			50	0
Open Space			216	0
Other, specify:				0
Other, specify:				0
Other, specify:				0
5	Volume Weighted EMC (sum of all products)		40	mg/L
BMP Parameters				
6	If pretreatment measures are included in the design, apply an adjustment of 25% 1 [Line 5 x (1-0.25)]		30	mg/L
7	Average Annual Precipitation		10	inches/yr
8	Calculate the Average Annual Runoff (Line 7 x (Line 1/12) x Line2		13661	cu-ft/yr
9	Calculate the Average Annual TSS Load (Line 8 x 62.4 x Line 6)/10^6		26	lb/yr
10	Calculate the BMP Footprint Needed (Line 9 x Line 4)/Line 3		128	sq-ft
11	Calculate the Alternative Minimum Footprint Sizing Factor [Line 10/ (Line 1 x Line 2)]		0.008	

Worksheet B.5-1: Simple Sizing Method for Biofiltration BMPs

BMP: Biofiltration Area #7

	Simple Sizing Method for Biofiltration BMPs	Worksheet B-5.1	
1	Remaining DCV after implementing retention BMPs	1079.8	cubic-feet
Partial Retention			
2	Infiltration rate from Worksheet D.5-1 if partial infiltration is feasible	0.00	in/hr
3	Allowable drawdown time for aggregate storage below the underdrain	36	hours
4	Depth of runoff that can be infiltrated [Line 2 x Line 3]	0	inches
5	Aggregate pore space	0.4	in/in
6	Required depth of gravel below the underdrain [Line 4/ Line 5]	0	inches
7	Assumed surface area of the biofiltration BMP	**427**	sq-ft
8	Media retained pore space	0.1	in/in
9	Volume retained by BMP [[Line 4 + (Line 12 x Line 8)]/12] x Line 7	64.1	cubic-feet
10	DCV that requires biofiltration [Line 1 – Line 9]	1015.8	cubic-feet
BMP Parameters			
11	Surface Ponding [6 inch minimum, 12 inch maximum]	6	inches
12	Media Thickness [18 inches minimum], also add mulch layer thickness to this line for sizing calculations	18	inches
13	Aggregate Storage above underdrain invert (12 inches typical) – use 0 inches for sizing of the aggregate is not over the entire bottom surface area	12	inches
14	Freely drained pore space	0.2	in/in
15	Media filtration rate to be used for sizing (5 in/hr. with no outlet control; if the filtration rate is controlled by the outlet use the outlet controlled rate which will be less than 5 in/hr.)	5	in/hr
Baseline Calculations			
16	Allowable Routing Time for sizing	6	hours
17	Depth filtered during storm [Line 15 x Line 16]	30	inches
18	Depth of Detention Storage [Line 11 + (Line 12 x Line 14) + (Line 13 x Line 5)]	14.4	inches
19	Total Depth Treated [Line 17 + Line 18]	44.4	inches
Option 1 – Biofilter 1.5 times the DCV			
20	Required biofiltered volume [1.5 x Line 10]	1523.7	cubic-feet
21	Required Footprint [Line 20/ Line 19] x 12	**411.8**	sq-ft
Option 2 - Store 0.75 of remaining DCV in pores and ponding			
22	Required Storage (surface + pores) Volume [0.75 x Line 10]	761.8	cubic-feet
23	Required Footprint [Line 22/ Line 18] x 12	**634.9**	sq-ft
Footprint of the BMP			
24	Area draining to the BMP	30492	sq-ft
25	Adjusted Runoff Factor for drainage area (Refer to Appendix B.1 and B.2)	0.84	
26	BMP Footprint Sizing Factor (Default 0.03 or an alternative minimum footprint sizing factor from Worksheet B.5-2, Line 11)	0.011	
27	Minimum BMP Footprint (Line 24 x Line 25 x minimum sizing factor)	268	sq-ft
28	Footprint of the BMP = Maximum(Minimum(Line 21, Line 23), Line 27)	**412**	sq-ft
Check for Volume Reduction [Not applicable for No Infiltration Condition]			
29	Calculate the fraction of DCV retained in the BMP [Line 9/Line 1]	**0.059**	unitless
30	Minimum required fraction of DCV retained for partial infiltration	**0.150**	unitless
31	Is the retained DCV ≥ 0.325? If the answer is no increase the footprint sizing factor in Line 26 until the answer is yes for this criterion.	**N/A**	unitless
	Check Footprint Provided >= Footprint Required	**OK**	

Notes:

1. Line 7 is used to estimate the amount of volume retained by the BMP. Update assumed surface area in Line 7 until its
2. The DCV fraction of 0.325 is based on a 40% average annual percent capture and a 36-hour drawdown time.

3. The increase in footprint for volume reduction can be optimized using the approach presented in Appendix B.5.2. The optimized footprint cannot be smaller than the alternative minimum footprint sizing factor from Worksheet B.5-2.

4. If the proposed biofiltration BMP footprint is smaller than the alternative minimum footprint sizing factor from Worksheet B.5-2, but satisfies Option 1 or Option 2 sizing, it is considered a compact biofiltration BMP and may be allowed at the discretion of the City Engineer, if it meets the requirements in Appendix F.

Worksheet B.5-2: Calculation of Alternative Minimum Footprint Sizing Factor BMP: Biofiltration #7

Alternative Minimum Footprint Sizing Factor		Worksheet B.5-2 (Page 1 of 2)		
1	Area draining to the BMP		30492.00	sq-ft
2	Adjusted Runoff Factor for drainage area (Refer to Appendix B.1 and B.2)		0.87	
3	Load to Clog (See Table B.5-3 for guidance; Lc)		2	lb/sq-ft
4	Allowable Period to Accumulate Clogging Load (T_L)		10	years
Volume Weighted EMC Calculation				
Land Use		**Fraction of Total DCV**	**TSS EMC (mg/L)**	**Product**
Single Family Residential			123	0
Commercial		0.35	128	45
Industrial			125	0
Education (Municipal)			132	0
Transportation			78	0
Multi-family Residential			40	0
Roof Runoff		0.65	14	9
Low Traffic Areas			50	0
Open Space			216	0
Other, specify:				0
Other, specify:				0
Other, specify:				0
5	Volume Weighted EMC (sum of all products)		54	mg/L
BMP Parameters				
6	If pretreatment measures are included in the design, apply an adjustment of 25% 1 [Line 5 x (1-0.25)]		40	mg/L
7	Average Annual Precipitation		10	inches/yr
8	Calculate the Average Annual Runoff (Line 7 x (Line 1/12) x Line2		22038	cu-ft/yr
9	Calculate the Average Annual TSS Load (Line 8 x 62.4 x Line 6)/10^6		56	lb/yr
10	Calculate the BMP Footprint Needed (Line 9 x Line 4)/Line 3		278	sq-ft
11	Calculate the Alternative Minimum Footprint Sizing Factor [Line 10/ (Line 1 x Line 2)]		0.011	

E.13 BF-2 Nutrient Sensitive Media Design

Some studies of bioretention with underdrains have observed export of nutrients, particularly inorganic nitrogen (nitrate and nitrite) and dissolved phosphorus. This has been observed to be a short-lived phenomenon in some studies or a long term issue in some studies. The composition of the soil media, including the chemistry of individual elements is believed to be an important factor in the potential for nutrient export. Organic amendments, often compost, have been identified as the most likely source of nutrient export. The quality and stability of organic amendments can vary widely.

The biofiltration media specifications contained in the County of San Diego Low Impact Development Handbook: Appendix G -Bioretention Soil Specification (June 2014, unless superseded by more recent edition) and the City of San Diego Low Impact Development Design Manual (page B-18) (July 2011, unless superseded by more recent edition) were developed with consideration of the potential for nutrient export. These specifications include criteria for individual component characteristics and quality in order to control the overall quality of the blended mixes. As of the publication of this manual, the June 2014 County of San Diego specifications provide more detail regarding mix design and quality control.

The City and County specifications noted above were developed for general purposes to meet permeability and treatment goals. In cases where the BMP discharges to receiving waters with nutrient impairments or nutrient TMDLs, the biofiltration media should be designed with the specific goal of minimizing the potential for export of nutrients from the media. Therefore, in addition to adhering to the City or County media specifications, the following guidelines should be followed:

1. Select plant palette to minimize plant nutrient needs

A landscape architect or agronomist should be consulted to select a plant palette that minimizes nutrient needs. Utilizing plants with low nutrient needs results in less need to enrich the biofiltration soil mix. If nutrient quantity is then tailored to plants with lower nutrient needs, these plants will generally have less competition from weeds, which typically need higher nutrient content. The following practices are recommended to minimize nutrient needs of the plant palette:

- **Utilize native, drought-tolerant plants and grasses where possible.** Native plants generally have a broader tolerance for nutrient content, and can be longer lived in leaner/lower nutrient soils.

- **Start plants from smaller starts or seed.** Younger plants are generally more tolerant of lower nutrient levels and tend to help develop soil structure as they grow. Given the lower cost of smaller plants, the project should be able to accept a plant mortality rate that is somewhat higher than starting from larger plants and providing high organic content.

2. Minimize excess nutrients in media mix

Once the low-nutrient plant palette is established (item 1), the landscape architect and/or agronomist should be consulted to assist in the design of a biofiltration media to balance the interests of plant

establishment, water retention capacity (irrigation demand), and the potential for nutrient export. The following guidelines should be followed:

- **The mix should not exceed the nutrient needs of plants.** In conventional landscape design, the nutrient needs of plants are often exceeded intentionally in order to provide a factor of safety for plant survival. This practice must be avoided in biofiltration media as excess nutrients will increase the chance of export. The mix designer should keep in mind that nutrients can be added later (through mulching, tilling of amendments into the surface), but it is not possible to remove nutrients, once added.

- **The actual nutrient content and organic content of the selected organic amendment source should be determined when specifying mix proportions.** Nutrient content (i.e., C:N ratio; plant extractable nutrients) and organic content (i.e., % organic material) are relatively inexpensive to measure via standard agronomic methods and can provide important information about mix design. If mix design relies on approximate assumption about nutrient/organic content and this is not confirmed with testing (or the results of prior representative testing), it is possible that the mix could contain much more nutrient than intended.

- **Nutrients are better retained in soils with higher cation exchange capacity.** Cation exchange capacity can be increased through selection of organic material with naturally high cation exchange capacity, such as peat or coconut coir pith, and/or selection of inorganic material with high cation exchange capacity such as some sands or engineered minerals (e.g., low P-index sands, zeolites, rhyolites, etc.). Including higher cation exchange capacity materials would tend to reduce the net export of nutrients. Natural silty materials also provide cation exchange capacity; however potential impacts to permeability need to be considered.

- **Focus on soil structure as well as nutrient content.** Soil structure is loosely defined as the ability of the soil to conduct and store water and nutrients as well as the degree of aeration of the soil. Soil structure can be more important than nutrient content in plant survival and biologic health of the system. If a good soil structure can be created with very low amounts of organic amendment, plants survivability should still be provided. While soil structure generally develops with time, biofiltration media can be designed to promote earlier development of soil structure. Soil structure is enhanced by the use of amendments with high humus content (as found in well-aged organic material). In addition, soil structure can be enhanced through the use of organic material with a distribution of particle sizes (i.e., a more heterogeneous mix).

- **Consider alternatives to compost.** Compost, by nature, is a material that is continually evolving and decaying. It can be challenging to determine whether tests previously done on a given compost stock are still representative. It can also be challenging to determine how the properties of the compost will change once placed in the media bed. More stable materials such as aged coco coir pith, peat, biochar, shredded bark, and/or other amendments should be considered.

With these considerations, it is anticipated that less than 10 percent organic amendment by volume

could be used, while still balancing plant survivability and water retention. If compost is used, designers should strongly consider utilizing less than 10 percent by volume.

3. Design with partial retention and/or internal water storage

An internal water storage zone, as described in Fact Sheet PR-1 is believed to improve retention of nutrients. For lined systems, an internal water storage zone worked by providing a zone that fluctuates between aerobic and anaerobic conditions, resulting in nitrification/denitrification. In soils that will allow infiltration, a partial retention design (PR-1) allows significant volume reduction and can also promote nitrification/denitrification.

Acknowledgment: This fact sheet has been adapted from the Orange County Technical Guidance Document (May 2011). It was originally developed based on input from: Deborah Deets, City of Los Angeles Bureau of Sanitation, Drew Ready, Center for Watershed Health, Rick Fisher, ASLA, City of Los Angeles Bureau of Engineering, Dr. Garn Wallace, Wallace Laboratories, Glen Dake, GDML, and Jason Schmidt, Tree People. The guidance provided herein does not reflect the individual opinions of any individual listed above and should not be cited or otherwise attributed to those listed.

A. If the calculated footprint fits, then size and design the selected BMPs accordingly using design criteria and considerations from fact sheets presented in Appendix E. The project has met the pollutant control performance standards.

B. If the calculated BMP footprint does not fit, evaluate additional options to make space for BMPs. Examples include potential design revisions, reconfiguring DMAs, evaluating other or additional BMP locations and evaluating other BMP types. If no additional options are practicable for making adequate space for the BMPs, then document why the remaining DCV could not be treated onsite and then implement the BMP using the maximum feasible footprint, design criteria and considerations from fact sheets presented in Appendix E then continue to the next step. Project approval if the entire DCV could not be treated because the BMP size could not fit within the project footprint is at the discretion of the City Engineer.

Step 5. Implement flow-thru treatment control BMPs for the remaining DCV. See Section 5.5.4 and B.6 for additional guidance.

A. When flow-thru treatment control BMPs are implemented the project applicant must also participate in an alternative compliance program. See Section 1.8.

Step 6. Prepare a SWQMP documenting site planning and opportunity assessment activities, final site layout and storm water management design. See Chapter 8.

Step 7. Identify and document O&M requirements and confirm acceptable to the responsible party. See Chapters 7 and Chapter 8.

5.2. DMAs Excluded from DCV Calculation

This manual provides project applicants the option to exclude DMAs from DCV calculations if they meet the criteria specified below. These DMAs must implement source control and site design BMPs from Chapter 4 as applicable and feasible. These exclusions will be evaluated on a case-by-case basis and approvals of these exclusions are at the discretion of the City Engineer.

5.2.1 Self-mitigating DMAs

Self-mitigating DMAs consist of natural or landscaped areas that drain directly offsite or to the public storm drain system. Self-mitigating DMAs must meet **ALL** the following characteristics to be eligible for exclusion:

- Vegetation in the natural or landscaped area is native and/or non-native/non-invasive drought tolerant species that do not require regular application of fertilizers and pesticides.
- Soils are undisturbed native topsoil, or disturbed soils that have been amended and aerated to promote water retention characteristics equivalent to undisturbed native topsoil.
- The incidental impervious areas are less than 5 percent of the self-mitigating area.
- Impervious area within the self-mitigated area should not be hydraulically connected to other impervious areas unless it is a storm water conveyance system (such as brow ditches).
- The self-mitigating area is hydraulically separate from DMAs that contain permanent storm water pollutant control BMPs.

Figure 5.3 illustrates the concept of self-mitigating DMAs.

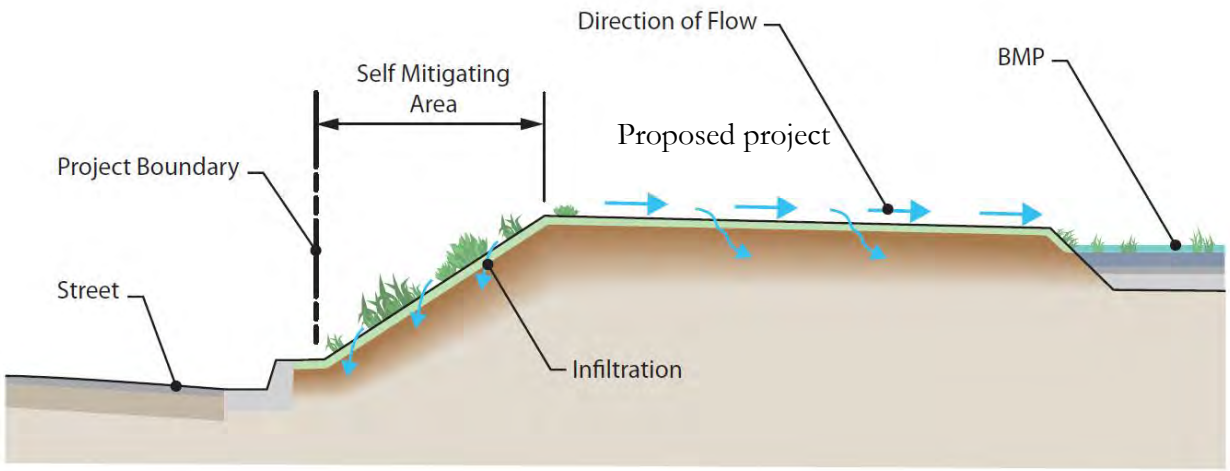

Figure 5-3. Self Mitigating Area

5.2.2 De Minimis DMAs

De minimis DMAs consist of areas that are very small, and therefore are not considered to be significant contributors of pollutants, and are considered by the owner and the City Engineer not practicable to drain to a BMP. It is anticipated that only a small subset of projects will qualify for de minimis DMA exclusion. Examples include driveway aprons connecting to existing streets, portions of sidewalks, retaining walls at the external boundaries of a project, and similar features. De minimis DMAs must include **ALL** of the following characteristics to be eligible for exclusion:

- Areas abut the perimeter of the development site.
- Topography and land ownership constraints make BMP construction to reasonably capture runoff technically infeasible.
- The portion of the site falling into this category is minimized through effective site design

- Each DMA should be less than 250 square feet and the sum of all de minimis DMAs should represent less than 2 percent of the total added or replaced impervious surface of the project. Except for projects where 2 percent of the total added or replaced impervious surface of the project is less than 250 square feet, a de minimis DMA of 250 square feet or less is allowed.
- Two de minimis DMAs cannot be adjacent to each other and hydraulically connected.
- The SWQMP must document the reason that each de minimis area could not be addressed otherwise.

5.2.3 Self-retaining DMAs via Qualifying Site Design BMPs

Self-retaining DMAs are areas that are designed with site design BMPs to retain runoff to a level equivalent to pervious land. BMP Fact Sheets for impervious area dispersion (SD-5 in Appendix E), green roofs (SD-6A in Appendix E) and permeable pavement (SD-6B in Appendix E) describe the design criteria by which BMPs can be considered self-retaining. DMAs that are categorized as self-retaining DMAs are considered to **only** meet the storm water pollutant control obligations.

Requirements for utilizing this category of DMA:

- Site design BMPs such as impervious area dispersion, green roofs and permeable pavement may be used individually or in combination to reduce or eliminate runoff from a portion of a PDP.
- If a site design BMP is used to create a self-retaining DMA, then the site design BMPs must be designed and implemented per the criteria in the applicable fact sheet. These criteria are conservatively developed to anticipate potential changes in DMA characteristics with time. The fact sheet criteria for meeting pollutant control requirement are summarized below:
    - SD-5 Impervious Area Dispersion: a DMA is considered self-retaining if the impervious to pervious ratio is:
        - 2:1 when the pervious area is composed of Hydrologic Soil Group A
        - 1:1 when the pervious area is composed of Hydrologic Soil Group B
    - SD-6A Self-retaining green roof: a DMA is considered self-retaining if the ratio of total drainage area (including green roof) to area of the green roof is 1:1 (i.e., green roof does not receive any run on).
    - SD-6B Self-retaining permeable pavement: a DMA is considered self-retaining if the ratio of total drainage area (including permeable pavement) to area of permeable pavement of 1.5:1 or less.
    - Note: Left side of ratios presented above represents the portion of the site that receives volume reduction and the right side of the ratio represents the site design BMP that promotes the achieved volume reduction.
- Site design BMPs used as part of a self-retaining DMA or as part of reducing runoff coefficients from a DMA must be clearly called out on project plans and in the SWQMP.
- The City Engineer may accept or reject a proposed self-retaining DMA meeting these criteria at its discretion. Examples of rationale for rejection may include the potential for negative

ATTACHMENT 2
BACKUP FOR PDP HYDROMODIFICATION CONTROL MEASURES

This is the cover sheet for Attachment 2.

☒ This attachment includes the documentation for why the project is exempt from PDP hydromodification management requirements. No other hydromodification information is required because all outfalls qualify for the hydromodification exemption.

Indicate which Items are Included behind this cover sheet:

Attachment Sequence	**Contents**	**Checklist**
Attachment 2a	Hydromodification Management Exhibit (Required)	☒ Included See Hydromodification Management Exhibit Checklist on the back of this Attachment cover sheet.
Attachment 2b	Management of Critical Coarse Sediment Yield Areas (WMAA Exhibit is required, additional analyses are optional) See Section 6.2 of the BMP Design Manual.	☐ Exhibit showing project drainage boundaries marked on WMAA Critical Coarse Sediment Yield Area Map (Required) Optional analyses for Critical Coarse Sediment Yield Area Determination ☐ 6.2.1 Verification of Geomorphic Landscape Units Onsite ☐ 6.2.2 Downstream Systems Sensitivity to Coarse Sediment ☐ 6.2.3 Optional Additional Analysis of Potential Critical Coarse Sediment Yield Areas Onsite
Attachment 2c	Geomorphic Assessment of Receiving Channels (Optional) See Section 6.3.4 of the BMP Design Manual.	☐ Not performed ☐ Included ☒ Submitted as separate stand-alone document
Attachment 2d	Flow Control Facility Design, including Structural BMP Drawdown Calculations and Overflow Design Summary (Required) See Chapter 6 and Appendix G of the BMP Design Manual	☐ Included ☒ Submitted as separate stand-alone document
Attachment 2e	Vector Control Plan (Required when structural BMPs will not drain in 96 hours)	☐ Included ☒ Not required because BMPs will drain in less than 96 hours

Use this checklist to ensure the required information has been included on the Hydromodification Management Exhibit:

The Hydromodification Management Exhibit must identify:

☐ Underlying hydrologic soil group
☐ Approximate depth to groundwater
☐ Existing natural hydrologic features (watercourses, seeps, springs, wetlands)
☐ Critical coarse sediment yield areas to be protected
☐ Existing topography
☐ Existing and proposed site drainage network and connections to drainage offsite
☐ Proposed grading
☐ Proposed impervious features
☐ Proposed design features and surface treatments used to minimize imperviousness
☐ Point(s) of Compliance (POC) for Hydromodification Management
☐ Existing and proposed drainage boundary and drainage area to each POC (when necessary, create separate exhibits for pre-development and post-project conditions)
☐ Structural BMPs for hydromodification management (identify location, type of BMP, and size/detail)

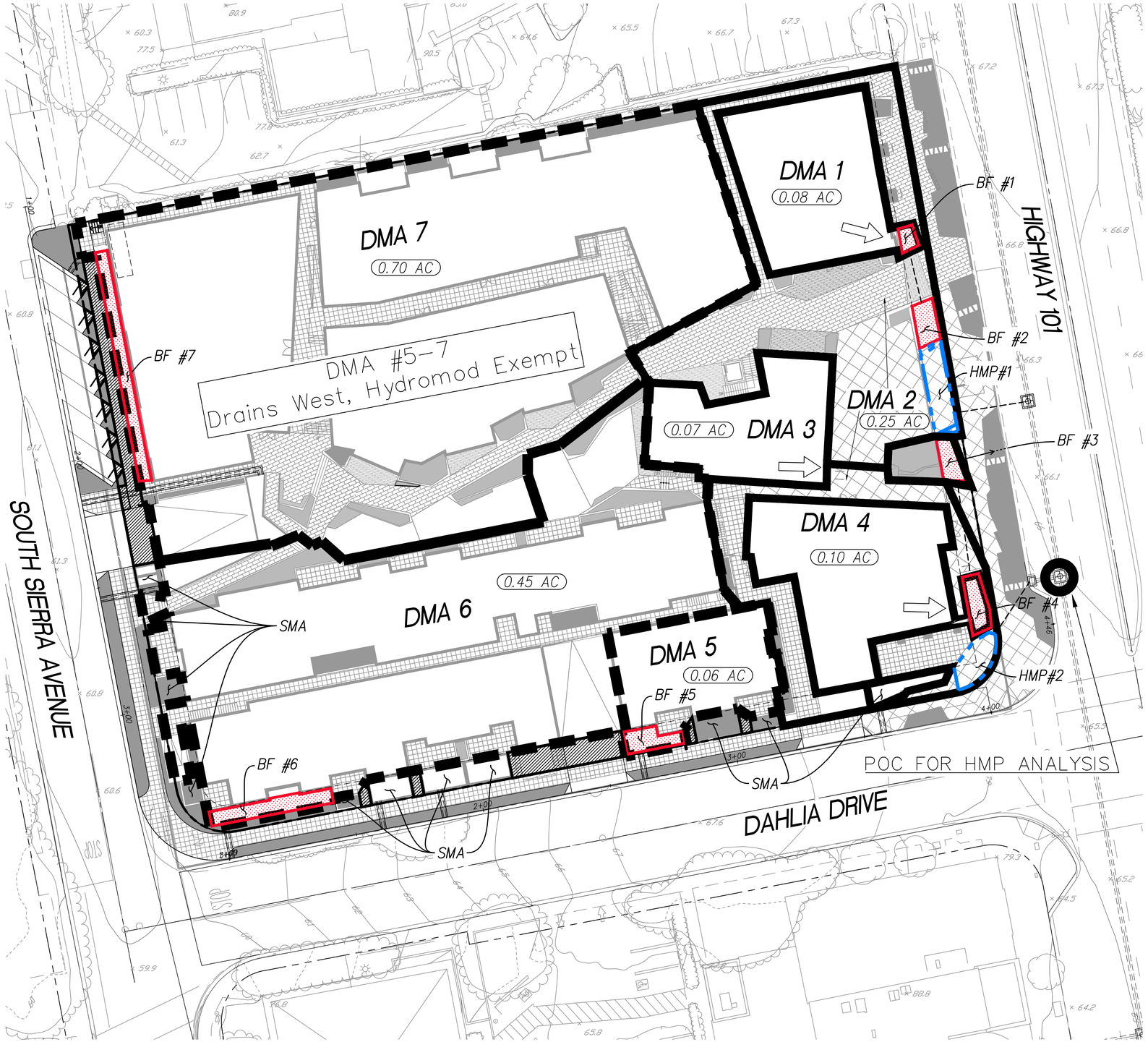

LEGEND

- PROPERTY BOUNDARY
- DMA BNDY – HYDROMOD EXEMPT
- DMA BNDY – HYDROMOD REQUIRED
- BIOFILTRATION PLANTER
- UNDERGROUND HMP STOR. (MIN EXT)
- DE MINIMIS AREAS
- FLOW DIRECTION
- SELF MITIGATING AREA — SMA

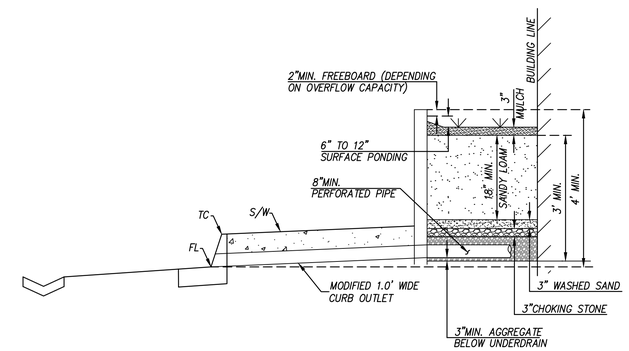

TYPICAL SECTION OF BIOFILTRATION PLANTER BMP

N.T.S.

BMP NOTES:

1. SITE DESIGN BMPS INCLUDE:
   - IMPERVIOUS AREA DISPERSION
   - LANDSCAPING WITH NATIVE OR DROUGHT TOLERANT SPECIES
2. SOURCE CONTROL BMPs FOR PROJECT INCLUDE:
   - PREVENTION OF ILLICIT DISCHARGES INTO THE MS4
   - STORM DRAIN STENCILING
   - PROTECT TRASH STORAGE AREAS FROM RAINFALL, RUN-ON, RUNOFF, AND WIND DISPERSAL
   - ADDITIONAL BMPs BASED ON POTENTIAL SOURCES OF RUNOFF POLLUTANTS (REFER TO FORM 2 SECTION SC-6 OF THE WQTR FOR MORE INFORMATION).
3. THE TREATMENT BMPs SELECTED FOR THIS PROJECT ARE SEVEN BIOFILTRATION PLANTERS WITH NUTRIENT SENSITIVE MEDIA. THE BMPS ARE PRIVATE AND WILL BE MAINTAINED BY THE PROPERTY OWNER.
4. WEST SIDE OF PROJECT SITE IS EXEMPT FROM HYDROMODIFICATION REQUIREMENTS. EAST SIDE OF PROJECT SITE IS SUBJECT TO HYDROMODIFICATION COMPLIANCE.
5. THE GEOTECHNICAL ENGINEER HAS CLASSIFIED THE PROJECT AS A "NO INFILTRATION" CONDITION SITE.

GENERAL NOTES:

- THE SOILS IN THE PROJECT SITE ARE CLASSIFIED AS SOIL TYPE B PER THE NRCS WEB SOIL SURVEY.
- NO GROUNDWATER WAS LOCATED ON SITE. HOWEVER GROUNDWATER WAS ENCOUNTERED AT A DEPTH OF 25-30 FEET BELOW GROUND SURFACE AT A SITE LOCATED 0.4 MILES NORTH OF THE PROJECT. PER NOVA SERVICES, INC. GEOTECHNICAL REPORT DATED MAY 2012.
- THERE ARE NO CCSYAs WITHIN THE PROPERTY OR THE VICINITY.

N

0 10 20 40 60

GRAPHICAL SCALE

SCALE: 1"=20'	PREPARED BY: PROJECT DESIGN CONSULTANTS — Planning | Landscape Architecture | Engineering | Survey	CITY OF SOLANA BEACH
JOB #: 4242.00	701 B Street, Suite 800 San Diego, CA 92101 619.235.6471 Tel 619.234.0349 Fax	SOLANA BEACH 101
CREATED: 6/15/17		HYDROMODIFICATION EXHIBIT ATTACHMENT 2A

Last save by SOPHIE LI, File Name P:\4242.00\Engr\Reports\WQTR\Attachments\Att2\Att2a – Hydromod Exhibit.dwg, Date Last Saved 6/16/2017 11:24:42 AM, Date Plotted Last 6/16/2017 11:24:53 AM

LEGEND

- MAJOR BASIN BOUNDARY
- MINOR BASIN BOUNDARY
- 010203 MINOR BASIN NUMBER
- OVERLAND FLOW PATH
- EXIST. RCP STORM DRAIN
- EXIST. CMP STORM DRAIN
- EXIST. MISC./UNKNOWN STORM DRAIN
- EXIST. PRIVATE STORM DRAIN
- EXIST. BOX CULVERT
- EXIST. OPEN CHANNEL
- EXIST INLET
- EXIST CLEANOUT
- PROP. RCP STORM DRAIN
- PROP INLET
- FLOW DIRECTION

Based on Drainage Plot from City
Master Drainage Plan

SOLANA BEACH 101
HYDROMODIFICATON EXEMPT EXHIBIT

ATTACHMENT 3
Structural BMP Maintenance Information

This is the cover sheet for Attachment 3.

Indicate which Items are Included behind this cover sheet:

Attachment Sequence	**Contents**	**Checklist**
Attachment 3a	Structural BMP Maintenance Thresholds and Actions (Required)	☐ Included See Structural BMP Maintenance Information Checklist on the back of this Attachment cover sheet.
Attachment 3b	Draft Maintenance Agreement (when applicable)	☒ Will be Included in Future Submittal ☐ Not Applicable

Use this checklist to ensure the required information has been included in the Structural BMP Maintenance Information Attachment:

☒ **Preliminary Design / Planning / CEQA level submittal:**

Attachment 3a must identify:

☒ Typical maintenance indicators and actions for proposed structural BMP(s) based on Section 7.7 of the BMP Design Manual

Attachment 3b is not required for preliminary design / planning / CEQA level submittal.

☐ **Final Design level submittal:**

Attachment 3a must identify:

☐ Specific maintenance indicators and actions for proposed structural BMP(s). This shall be based on Section 7.7 of the BMP Design Manual and enhanced to reflect actual proposed components of the structural BMP(s)
☐ How to access the structural BMP(s) to inspect and perform maintenance
☐ Features that are provided to facilitate inspection (e.g., observation ports, cleanouts, silt posts, or other features that allow the inspector to view necessary components of the structural BMP and compare to maintenance thresholds)
☐ Manufacturer and part number for proprietary parts of structural BMP(s) when applicable
☐ Maintenance thresholds specific to the structural BMP(s), with a location-specific frame of reference (e.g., level of accumulated materials that triggers removal of the materials, to be identified based on viewing marks on silt posts or measured with a survey rod with respect to a fixed benchmark within the BMP)
☐ Recommended equipment to perform maintenance
☐ When applicable, necessary special training or certification requirements for inspection and maintenance personnel such as confined space entry or hazardous waste management

Attachment 3b: For private entity operation and maintenance, Attachment 3b shall include a draft maintenance agreement in the local jurisdiction's standard format (PDP applicant to contact the City Engineer to obtain the current maintenance agreement forms).

designed during the next storm event.

7.7.1 Maintenance of Vegetated Infiltration or Filtration BMPs

"Vegetated infiltration or filtration BMPs" are structural BMPs that include vegetation as a component of the BMP. Applicable Fact Sheets may include INF-2 (bioretention), PR-1 (biofiltration with partial retention), BF-1 (biofiltration) or FT-1 (vegetated swale). The vegetated BMP may or may not include amended soils, engineered soils/media, subsurface gravel layer, underdrain, and/or impermeable liner. The project civil engineer is responsible for determining which maintenance indicators and actions shown in Table 7-2 are applicable based on the components of the structural BMP.

TABLE 7-2. Maintenance Indicators and Actions for Vegetated BMPs

Typical Maintenance Indicator(s) for Vegetated BMPs	Maintenance Actions
Accumulation of sediment, litter, or debris	Remove and properly dispose of accumulated materials, without damage to the vegetation.
Poor vegetation establishment	Re-seed, re-plant, or re-establish vegetation per original plans.
Overgrown vegetation	Mow or trim as appropriate, but not less than the design height of the vegetation per original plans when applicable (e.g. a vegetated swale may require a minimum vegetation height).
Erosion due to concentrated irrigation flow	Repair/re-seed/re-plant eroded areas and adjust the irrigation system.
Erosion due to concentrated storm water runoff flow	Repair/re-seed/re-plant eroded areas, and make appropriate corrective measures such as adding erosion control blankets, adding rock at flow entry points to dissipate flow, or minor re-grading to restore proper drainage according to the original plan. If the issue is not corrected by restoring the BMP to the original plan and grade, the City Engineer shall be contacted prior to any additional repairs or reconstruction.
Standing water in vegetated swales	Make appropriate corrective measures such as adjusting irrigation system, removing obstructions of debris or invasive vegetation, loosening or replacing top soil to allow for better infiltration, or minor re-grading for proper drainage. If the issue is not corrected by restoring the BMP to the original plan and grade, the City Engineer shall be contacted prior to any additional repairs or reconstruction.
Standing water in bioretention, biofiltration with partial retention, or biofiltration areas, or flow-through planter boxes for longer than 96 hours following a storm event*	Make appropriate corrective measures such as adjusting irrigation system, removing obstructions of debris or invasive vegetation, clearing underdrains (where applicable), or repairing/replacing soils with clogged sediment 'caked' surface or compacted soils.
Obstructed inlet or outlet structure	Clear debris and obstructions.

Typical Maintenance Indicator(s) for Vegetated BMPs	Maintenance Actions
Damage to structural components such as weirs, inlet or outlet structures	Repair or replace as applicable.
*These BMPs typically include a surface ponding layer as part of their function which may take 96 hours to drain following a storm event.	

7.7.2 Maintenance of Non-Vegetated Infiltration BMPs

"Non-vegetated infiltration BMPs" are structural BMPs that store storm water runoff until it infiltrates into the ground, and do not include vegetation as a component of the BMP (refer to the "vegetated BMPs" category for infiltration BMPs that include vegetation). Non-vegetated infiltration BMPs generally include non-vegetated infiltration trenches and infiltration basins, engineered soils/media, dry wells, underground infiltration galleries, and permeable pavement with underground infiltration gallery. Applicable Fact Sheets may include INF-1 (infiltration basin) or INF-3 (permeable pavement). The non-vegetated infiltration BMP may or may not include a pre-treatment device, and may or may not include above-ground storage of runoff. The project civil engineer is responsible for determining which maintenance indicators and actions shown in Table 7-3 are applicable based on the components of the structural BMP.

TABLE 7-3. Maintenance Indicators and Actions for Non-Vegetated Infiltration BMPs

Typical Maintenance Indicator(s) for Non-Vegetated Infiltration BMPs	Maintenance Actions
Accumulation of sediment, litter, or debris in infiltration basin, pre-treatment device, or on permeable pavement surface	Remove and properly dispose accumulated materials.
Standing water in infiltration basin without subsurface infiltration gallery for longer than 96 hours following a storm event	Remove and replace clogged surface soils.
Standing water in subsurface infiltration gallery for longer than 96 hours following a storm event	This condition requires investigation of why infiltration is not occurring. If feasible, corrective action shall be taken to restore infiltration (e.g. flush fine sediment or remove and replace clogged soils). BMP may require retrofit if infiltration cannot be restored. If retrofit is necessary, the City Engineer shall be contacted prior to any repairs or reconstruction.
Standing water in permeable paving area	Flush fine sediment from paving and subsurface gravel. Provide routine vacuuming and/or sweeping of permeable paving areas to prevent clogging.
Damage to permeable paving surface	Repair or replace damaged surface as appropriate.

ATTACHMENT 4
Copy of Plan Sheets Showing Permanent Storm Water BMPs

This is the cover sheet for Attachment 4.

Use this checklist to ensure the required information has been included on the plans:

The plans must identify:

☐ Structural BMP(s) with ID numbers matching Form 4 Summary of PDP Structural BMPs
☐ The grading and drainage design shown on the plans must be consistent with the delineation of DMAs shown on the DMA exhibit
☐ Details and specifications for construction of structural BMP(s)
☐ Signage indicating the location and boundary of structural BMP(s) as required by the City Engineer
☐ How to access the structural BMP(s) to inspect and perform maintenance
☐ Features that are provided to facilitate inspection (e.g., observation ports, cleanouts, silt posts, or other features that allow the inspector to view necessary components of the structural BMP and compare to maintenance thresholds)
☐ Manufacturer and part number for proprietary parts of structural BMP(s) when applicable
☐ Maintenance thresholds specific to the structural BMP(s), with a location-specific frame of reference (e.g., level of accumulated materials that triggers removal of the materials, to be identified based on viewing marks on silt posts or measured with a survey rod with respect to a fixed benchmark within the BMP)
☐ Recommended equipment to perform maintenance
☐ When applicable, necessary special training or certification requirements for inspection and maintenance personnel such as confined space entry or hazardous waste management
☐ Include landscaping plan sheets showing vegetation requirements for vegetated structural BMP(s)
☐ All BMPs must be fully dimensioned on the plans
☐ When proprietary BMPs are used, site-specific cross section with outflow, inflow, and model number shall be provided. Photocopies of general brochures are not acceptable.
☐ A single plan BMP sheet for each construction drawing highlighting only those BMPs included in the referenced construction drawing. (See Section 5.5.2 of the City's JRMP for further detail.)

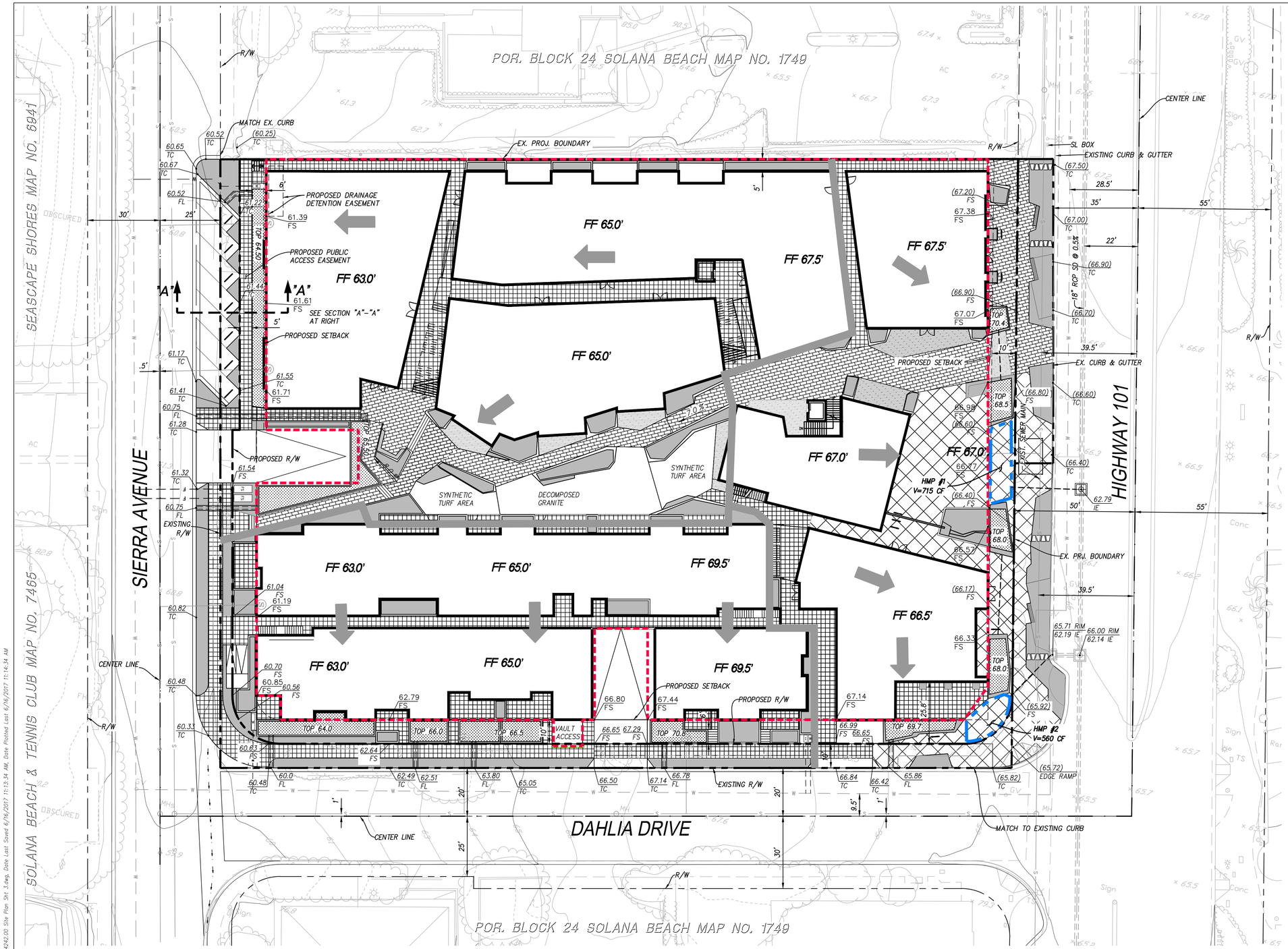

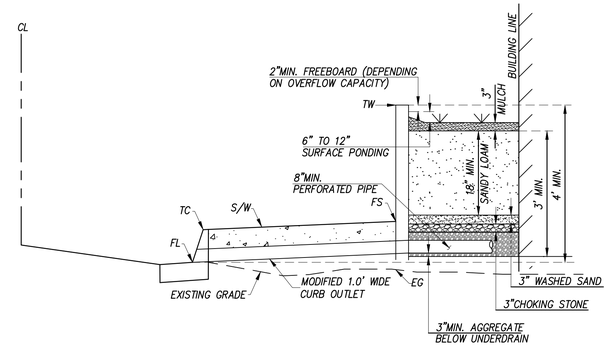

SECTION "A"-"A"
BIOFILTRATION BMP
N.T.S.

LEGEND

- EXISTING RIGHT OF WAY
- EXISTING CURB AND GUTTER
- EXISTING LOT LINE
- EXISTING SURVEYED CENTERLINE
- EXISTING CONTOUR
- EXISTING SEWER
- EXISTING WATER
- EXISTING GAS
- EXISTING STREET LIGHT
- EXISTING FIRE HYDRANT
- PROPERTY LINE
- PROPOSED CURB AND GUTTER
- PROPOSED GARAGE WALL

LEGEND CONT.

- PROPOSED BUILDING FOOTPRINT AT STREET LEVEL
- PROPOSED SIDEWALK
- PROPOSED DRIVEWAY
- PROPOSED HARDSCAPE
- PROPOSED PLANTING AREA OR PLANTER PER LANDSCAPE PLANS
- PROPOSED BIOFILTRATION BMP
- MODIFIED 1.0' WIDE CURB OUTLET
- STORM DRAIN PVC PIPE
- UNDERGROUND RAINSTORE HMP STORAGE
- DRAINAGE FLOW
- DRAINAGE MANAGEMENT AREA

M.W. STEELE GROUP
ARCHITECTURE | PLANNING
1805 NEWTON AVE | SUITE A
SAN DIEGO | CA | 92113
TELEPHONE 619 230 0325
www.mwsteele.com

Solana Beach 101

Highway 101 & Dahlia Drive
Solana Beach, CA 92075

Development Permit

Project Number:	4242.00
Original Date:	22 November, 2016
Drawn:	Jo Villa
Checked:	Raul Rodriguez

Resubmittal - 24 January 2017
Resubmittal - 22 March 2017
Resubmittal - 10 May 2017

NOT FOR CONSTRUCTION
SHEET SIZE: 24" x 36"
DO NOT SCALE DRAWINGS

N

0 10 20 40 60
GRAPHICAL SCALE

PRELIMINARY DRAINAGE PLAN

REGISTERED PROFESSIONAL ENGINEER
GREGORY M. SHIELDS
No. 42951
Exp. 03-31-18
CIVIL
STATE OF CALIFORNIA

PROJECT DESIGN CONSULTANTS
Planning | Landscape Architecture | Engineering | Survey
701 B Street, Suite 800 San Diego, CA 92101
619.235.6471 Tel 619.234.0349 Fax

GREGORY M. SHIELDS, R.C.E. 42951	DATE	REGISTRATION EXPIRES 3-31-18	DESIGNED BY:	PM REVIEW:	SURVEY REVIEW:

Sheet Number Of

SHEET C-3

File Name: P:\4242.00\Engr\DWG_Plans\Development Permit\4242.00 Site Plan Sht 3.dwg, Date Last Saved 6/16/2017 11:13:34 AM, Date Plotted Last 6/16/2017 11:14:34 AM

© 2016, MW Steele Group, Inc. All drawings and specifications are property of the architect and shall not be reproduced in any manner without expressed written permission from MW Steele Group, Inc.

ATTACHMENT 5

Existing and Proposed Condition

Drainage Maps

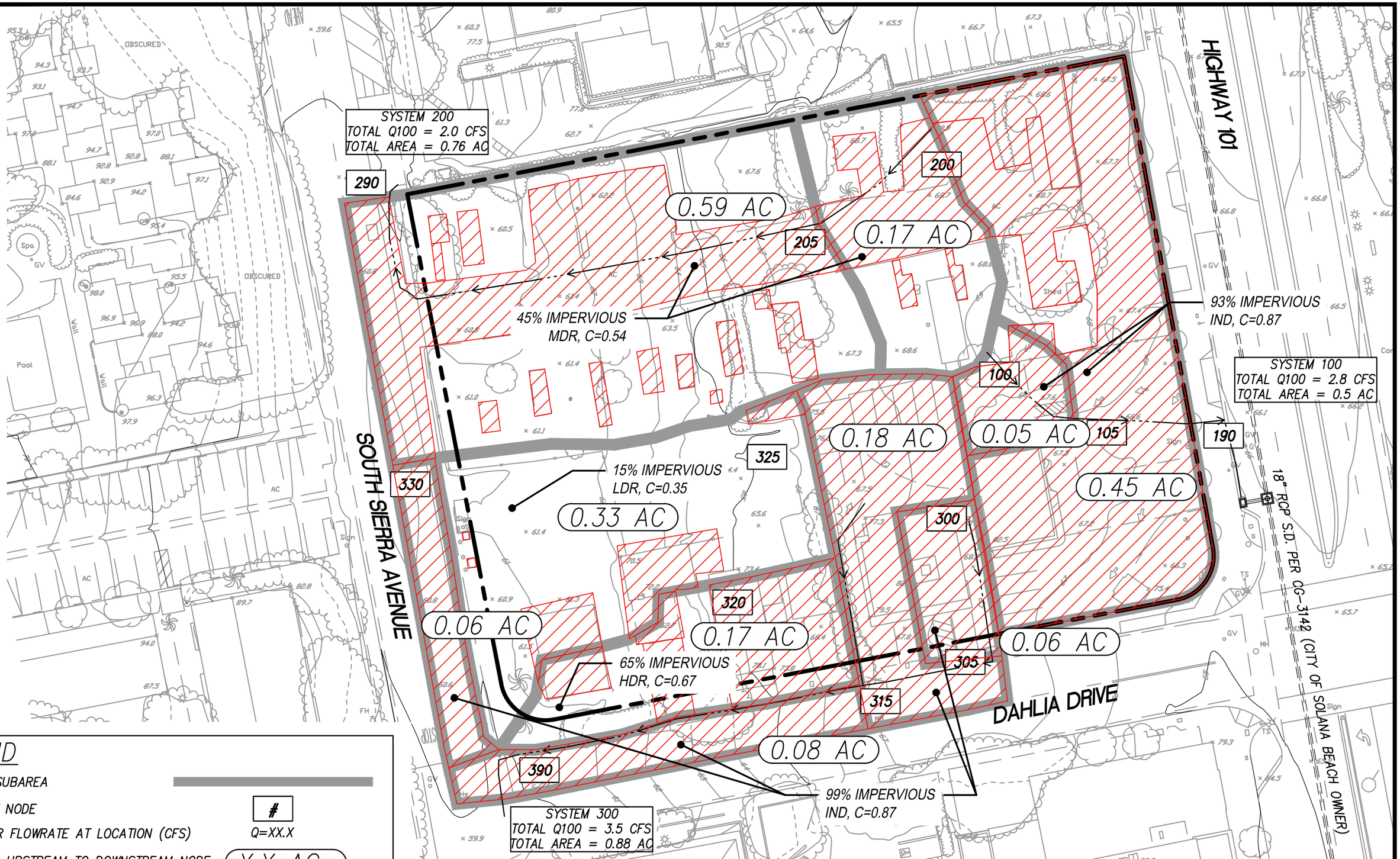

LEGEND

DRAINAGE SUBAREA	
HYDROLOGY NODE	#
PEAK 100YR FLOWRATE AT LOCATION (CFS)	Q=XX.X
AREA FROM UPSTREAM TO DOWNSTREAM NODE	X.X AC
DRAINAGE FLOWPATH	
IMPERVIOUS AREAS	

SCALE:	1"=40'
JOB #:	4242
CREATED:	11/23/16

PREPARED BY:

PROJECT DESIGN CONSULTANTS
Planning | Engineering | Survey

701 B Street, Suite 800
San Diego, CA 92101
619.235.6471 Tel
619.234.0349 Fax

CITY OF SOLANA BEACH

SOLANA BEACH 101

DRAINAGE MAP
EXISTING CONDITIONS
EXHIBIT A

P:\4242.00\Engr\Reports\Drainage-Entitlement\EXH\A-Drg-Existing.dwg 5/16/2017 11:32:43 AM

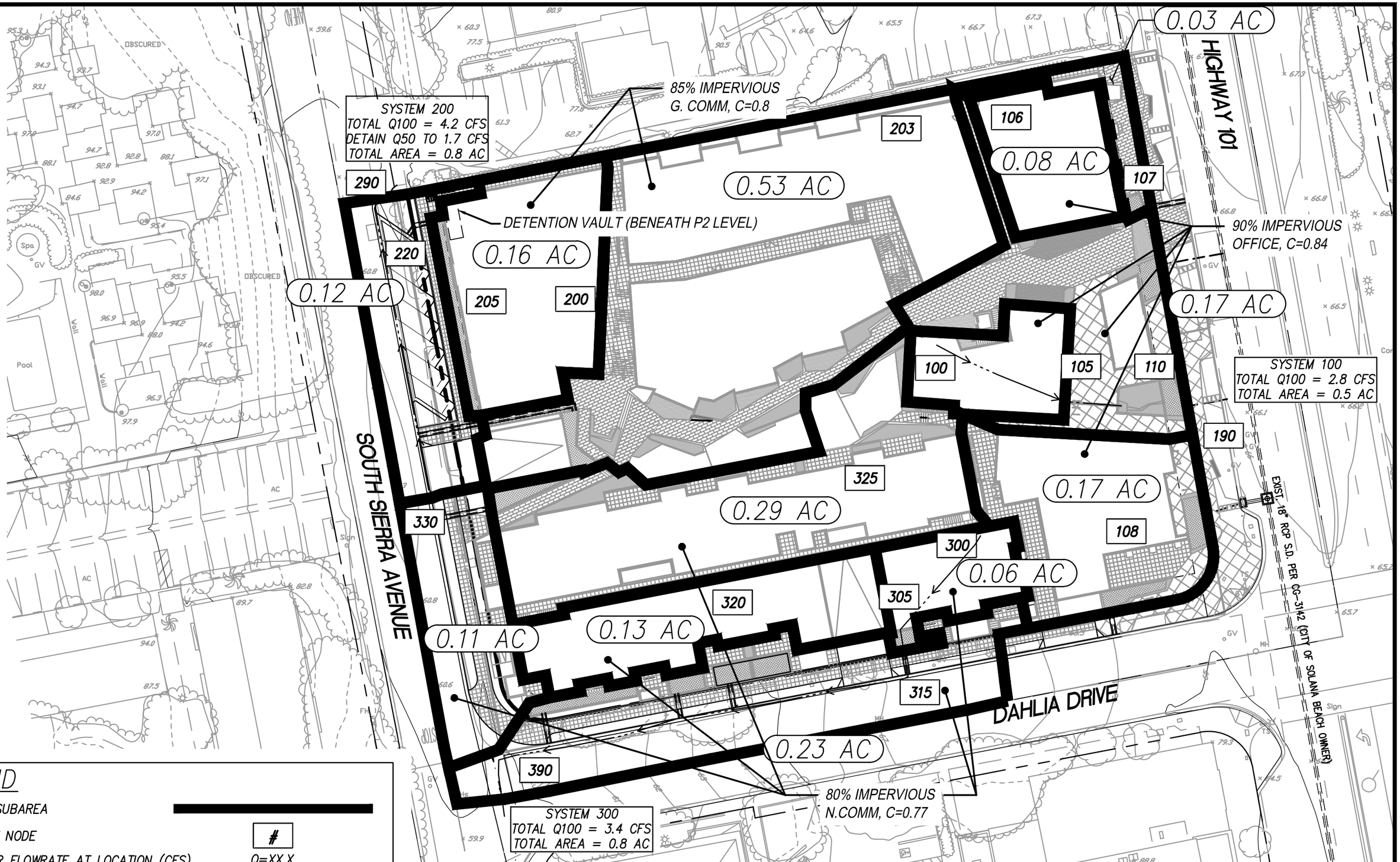

LEGEND

DRAINAGE SUBAREA	
HYDROLOGY NODE	#
PEAK 100YR FLOWRATE AT LOCATION (CFS)	Q=XX.X
AREA FROM UPSTREAM TO DOWNSTREAM NODE	X.X AC
DRAINAGE FLOWPATH	

NOTE: ALL OUTLETS AND CURB UNDER DRAINS ARE PRIVATE AND OWNED BY ZEPHYR PARTNERS

SCALE:	1"=40'
JOB #:	4242
CREATED:	11/23/16

PREPARED BY:

PROJECT DESIGN CONSULTANTS
Planning | Engineering | Survey

701 B Street, Suite 800
San Diego, CA 92101
619.235.6471 Tel
619.234.0349 Fax

CITY OF SOLANA BEACH

SOLANA BEACH 101

DRAINAGE MAP
PROPOSED CONDITIONS
EXHIBIT B

P:\4242.00\Engr\Reports\Drainage-Entitlement\EXH\B-Drg-Proposed.dwg 5/17/2017 4:57:05 PM